SOUTHERN®
UNIVERSITY SYSTEM

BATON ROUGE • NEW ORLEANS • SHREVEPORT

BOARD OF SUPERVISORS MEETING

February 21, 2025

Dr. Leon R. Tarver, II
Cultural and Heritage Center
Baton Rouge, LA.
9:45 a.m.

Mission Statement

Through shared governance, leadership, and a diverse system of unique institutions, the mission of the Southern University and A&M College System is to deliver affordable world-class education, a trained workforce, state-of-the-art research, creative scholarship, and transformational public service to the State of Louisiana, the Nation, and the World.

SPECIAL RECOGNITION COMMITTEE
Board of Supervisors Meeting Room
Leon R. Tarver II Cultural & Heritage Center
Baton Rouge, LA
February 21, 2025

AGENDA

1. Call to Order
2. Invocation and Pledge of Allegiance
3. Special Presentation(s)
    A. Human Jukebox Superbowl Recognition
    B. Top Jags Recruitment Book
4. Adjournment

Members

Atty Tony Clayton – Chairman, Mr. Reggie Abraham, Ms. Maple Gaines, Mr. Donald Ray Henry, Mr. Myron K. Lawson, Atty. Domoine Rutledge, Atty. Edwin Shorty, Mrs. Ann Smith, Rev. Dr. Samuel Tolbert, and Dr. Rani Whitfield

SOUTHERN UNIVERSITY
AND AGRICULTURAL & MECHANICAL COLLEGE

Office of the Chancellor

J.S. Clark Administration Building
Post Office Box 9820
Baton Rouge, Louisiana 70813
Office: 225 771-2360

February 5, 2025

Dennis J. Shields, President
Southern University System
4th Floor, J S Clark Administration Building
Baton Rouge, Louisiana 70813

Re: TOP JAGS Recruitment Book

Dear President Shields,

Southern University and A&M College has been working closely with the "TOP JAGS" program to focus on recruiting of students with an ACT score of 20 and above. A new "TOP JAGS" program book has been produced. Mr. Jackson would like to present the new "TOP JAG" book to the Southern University Board of Supervisors at its February 21, 2025 meeting and give an update of "TOP JAGS" activities to assist in the recruiting of students with ACT scores of 20 and above.

I respectfully request that Mr. Eldred Jackson be given an opportunity to make a presentation to the Board of Supervisors on February 21, 2025. If you have any questions, please contact me.

Yours sincerely,

John K. Pierre

John K. Pierre, Chancellor
and Vanue B. Lacour Endowed Law Professor

Mission Statement

Through shared governance, leadership, and a diverse system of unique institutions, the mission of the Southern University and A&M College System is to deliver affordable world-class education, a trained workforce, state-of-the-art research, creative scholarship, and transformational public service to the State of Louisiana, the Nation, and the World.

FACILITIES AND PROPERTY COMMITTEE

(Following Special Recognition Committee)
February 21, 2025

AGENDA

1. Call to Order

2. Roll Call

3. Adoption of the Agenda

4. Public Comments

5. Informational Item(s)

    A. Facilities Update (SUS)

6. Other Business

7. Adjournment

Members

Rev. Donald Ray Henry – Chair, Ms. Maple Gaines – Vice Chair, Ms. Zazell Dudley, Mr. Chris Masingill, Mr. Paul P. Matthews, Atty. Domoine Rutledge, Atty. Edwin Shorty, Mrs. Ann Smith, Dr. Rani Whitfield, and Atty. Tony Clayton – Ex Officio

Southern University System
Active Capital Improvement Project Tracking

Capital Outlay Funded Projects

Legend Planning and Design | Bidding and Contracting | Construction

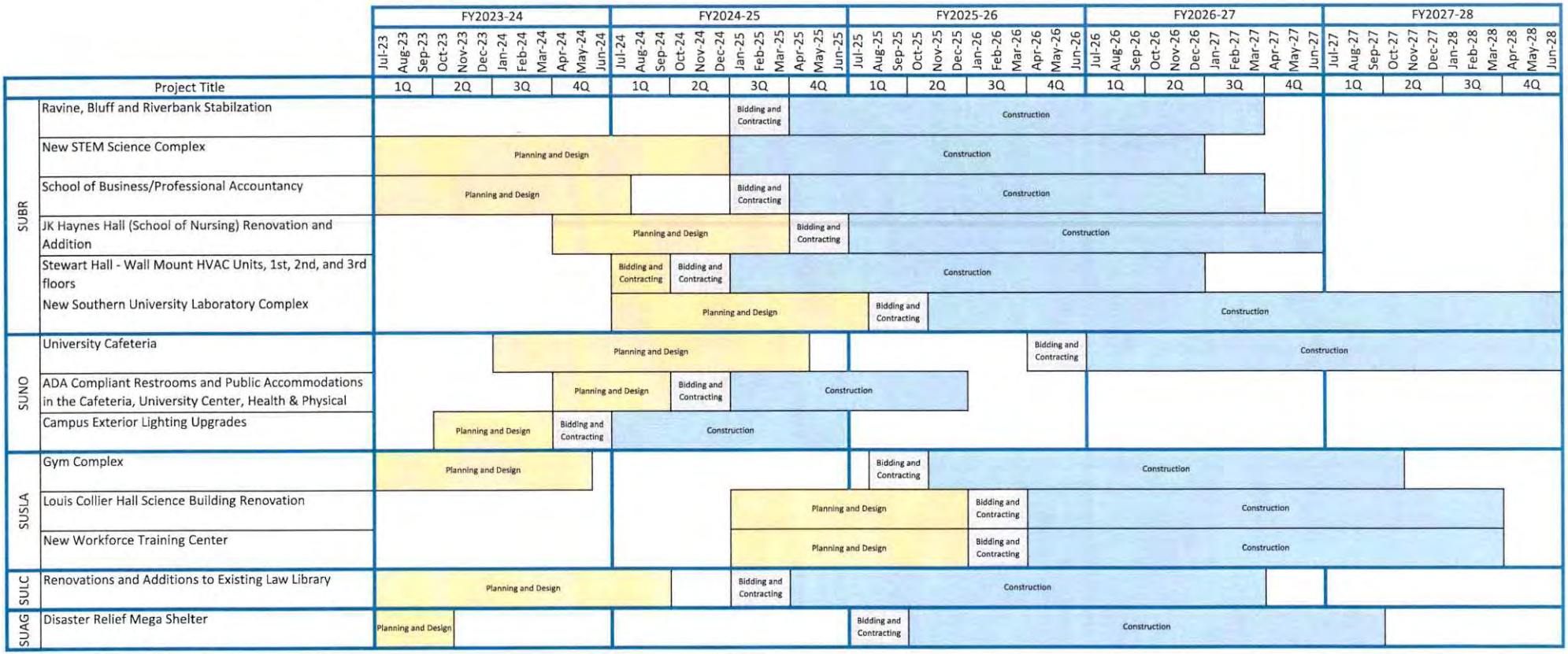

Southern University System
Active Capital Improvement Project Tracking

Self-Funded Projects

Legend Planning and Design | Bidding and Contracting | Construction

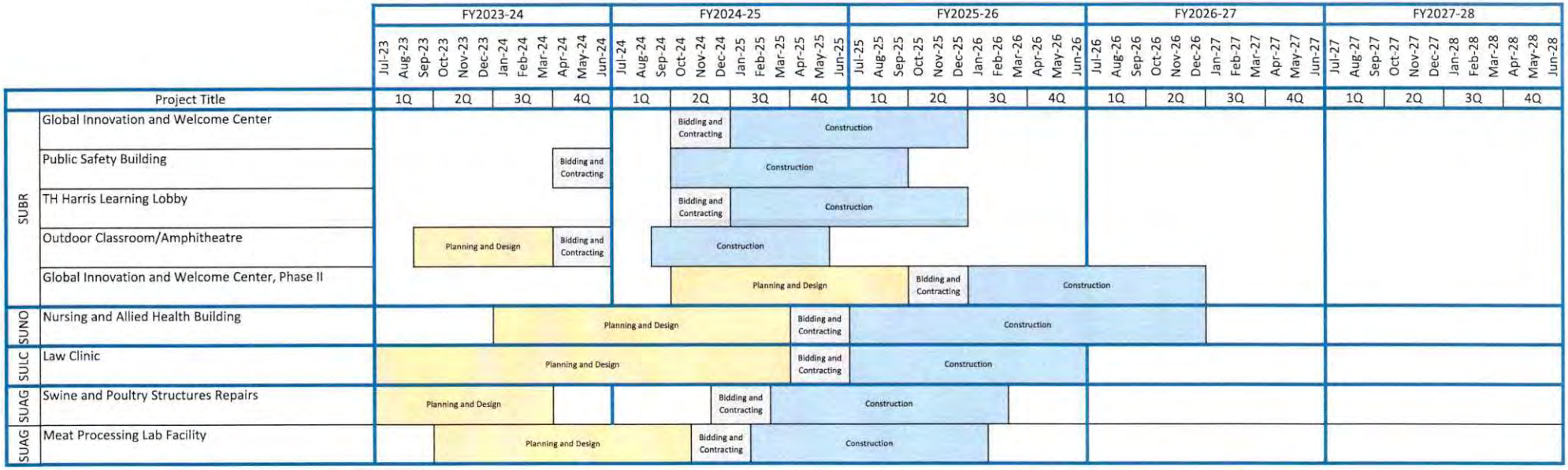

Mission Statement

Through shared governance, leadership, and a diverse system of unique institutions, the mission of the Southern University and A&M College System is to deliver affordable world-class education, a trained workforce, state-of-the-art research, creative scholarship, and transformational public service to the State of Louisiana, the Nation, and the World.

FINANCE COMMITTEE

(Following Facilities and Property Committee)

February 21, 2025

AGENDA

1. Call to Order
2. Roll Call
3. Adoption of the Agenda
4. Public Comments
5. Informational Item(s)
   A. Interim Financial Report
6. Other Business
7. Adjournment

Members

Mr. Myron K. Lawson – Chair, Mrs. Ann Smith – Vice Chair, Mr. Reggie Abraham, Atty. Quincy Cawthorne, Ms. Zazell Dudley, Ms. Maple Gaines, Mr. Chris Masengill, Atty. Domoine Rutledge, and Atty. Tony Clayton– Ex Officio

Southern University System
General Operating Budget Interim Financial Statement
For Fiscal Year Ending June 30, 2025
As of January 31, 2025
Executive Summary

Attached is a summary of the Southern University System fiscal year 2024-2025 general operating budget financial activities for the month ending June 30, 2025. The Southern University System is reporting a $14,533,106 decrease in self-generated revenue as compared to the approved budget. The expenditures for the campuses have been adjusted to offset the shortfall for the fiscal year.

Southern University Board and System Administration
The System Office is funded by state appropriations and there is no projected shortfall in revenues.

Southern University Baton Rouge Campus
The Baton Rouge Campus has a $404,349 projected increase in self-generated revenue as compared to the approved budget. The Baton Rouge Campus has increased scholarships to balance the operating budget for the fiscal year.

Southern University Law Center
The Law Center has a $2,123,185 projected shortfall in self-generated revenue as compared to the approved budget. The Law Center has reduced operating expenditures to balance the operating budget for the fiscal year. The Law Center has submitted to the Board of Regents a request to reduce self-generated revenue authority to align the budget with current enrollment and fees.

Southern University News Orleans Campus
The New Orleans Campus has a $2,757,098 projected shortfall in self-generated revenue as compared to the approved budget. The New Orleans Campus has reduced salaries, related benefits, operating expenses, supplies, other charges, and equipment to balance the operating budget for the fiscal year. The New Orleans Campus has submitted to the Board of Regents a request to reduce self-generated revenue authority to align the budget with the current enrollment and fees.

Southern University Shreveport Campus
The Shreveport Campus has a $57,172 projected shortfall in self-generated revenue as compared to the approved budget. The Shreveport Campus has reduced salaries, and related benefits to balance their operating budget for the fiscal year.

Southern University Agricultural Research and Extension Center
The Agricultural Research and Extension Center has a $10 million projected shortfall in federal funds as compared to the approved budget. The Agricultural Research and Extension Center has reduced major repairs to balance their operating budget for the fiscal year. The $10 Million in federal funds was not a monetary allocation. Southern University has inquired as to the purpose of the unfunded appropriation and has not received an answer. The Agricultural Research Center has been requesting $10 million in annual recurring base state funding, which now stands at $7.5 million.

Summary
Based on the information above, the campuses have made the appropriate adjustments to maintain a balanced budget as of January 31, 2025. Revenues and expenditures will be monitored to ensure a balanced operating budget for the fiscal year 2024-2025.

Southern University System
General Operating Budget Interim Financial Statement
For Fiscal Year Ending June 30, 2025
As of January 31, 2025

	FY25 Budget	Actual	Projected	Total FY25	Over/(Under) Budget	% Actual to Budget
Revenues						
General Fund Direct	$ 68,472,475	$ 47,074,829	$ 21,397,646	$ 68,472,475	$ -	68.8%
Statutory Dedicated	12,454,156	9,560,728	2,893,428	12,454,156	-	76.8%
Federal	13,654,209	2,171,072	1,483,137	3,654,209	(10,000,000)	15.9%
Self Generated						
Tuition - Fall 2024	35,857,606	35,117,154	-	35,117,154	(740,452)	97.9%
Tuition - Spring 2025	31,861,880	30,871,246	26,530	30,897,776	(964,105)	96.9%
Tuition - Summer	6,311,451	2,965,870	2,136,102	5,101,972	(1,209,479)	47.0%
Out-of-State Fees	18,927,819	19,801,622	811,842	20,613,464	1,685,645	104.6%
Other	22,872,344	12,045,217	7,522,412	19,567,629	(3,304,715)	52.7%
Interagency Transfer	4,476,791	2,577,120	1,899,671	4,476,791	-	57.6%
Total Revenues	**$ 214,888,731**	**$ 162,184,857**	**$ 38,170,768**	**$ 200,355,626**	**$ (14,533,106)**	**75.5%**
Expenditures						
Salaries	$ 93,722,793	$ 54,835,606	$ 37,788,133	$ 92,623,739	$ (1,099,054)	58.5%
Other Compensation	345,877	170,543	145,334	315,877	(30,000)	49.3%
Related Benefits	37,687,112	20,568,818	16,329,914	36,898,732	(788,380)	54.6%
Total Personal Services	**$ 131,755,782**	**$ 75,574,966**	**$ 54,263,382**	**$ 129,838,348**	**$ (1,917,434)**	**57.4%**
Travel	1,502,109	550,631	932,884	1,483,515	(18,594)	36.7%
Operating Services	21,284,452	10,537,387	7,255,468	17,792,855	(3,491,597)	49.5%
Supplies	2,492,527	1,304,767	969,180	2,273,947	(218,580)	52.3%
Total Operating Expenses	**$ 25,279,088**	**$ 12,392,785**	**$ 9,157,532**	**$ 21,550,317**	**$ (3,728,771)**	**49.0%**
Professional Services	2,624,196	1,280,374	1,520,565	2,800,939	176,743	48.8%
Other Charges	17,419,932	2,118,193	13,580,509	15,698,702	(1,721,230)	12.2%
Debt Services						
Interagency Transfers	10,067,114	4,394,589	5,322,741	9,717,330	(349,784)	43.7%
Total Other Charges	**$ 30,111,242**	**$ 7,793,157**	**$ 20,423,814**	**$ 28,216,971**	**$ (1,894,271)**	**25.9%**
General Acquisitions	2,201,741	79,137	2,122,604	2,201,741	-	3.6%
Library Acquisitions	487,649	279,421	133,159	412,580	(75,069)	57.3%
Major Repairs	11,362,000	785,241	576,759	1,362,000	(10,000,000)	6.9%
Total Acquisitions/Major Repairs	**$ 14,051,390**	**$ 1,143,799**	**$ 2,832,522**	**$ 3,976,321**	**$ (10,075,069)**	**8.1%**
Scholarships	13,691,229	15,806,582	967,087	16,773,669	3,082,440	115.5%
Total Expenditures	**$ 214,888,731**	**$ 112,711,289**	**$ 87,644,336**	**$ 200,355,626**	**$ (14,533,106)**	**52.5%**

Southern University Board and System Administration
General Operating Budget Interim Financial Statement
For Fiscal Year Ending June 30, 2025
As of January 31, 2025

	FY25 Budget	Actual	Projected	Total FY25	Over/(Under) Budget	% Actual to Budget
Revenues						
General Fund Direct	$ 4,163,212	$ 2,862,210	$ 1,301,002	$ 4,163,212	$ -	68.8%
Statutory Dedicated	-	-	-			
Federal			-			
Self Generated						
Tuition - Fall 2024						
Tuition - Spring 2025						
Tuition - Summer						
Out-of-State Fees						
Other						
Interagency Transfer						
Total Revenues	**$ 4,163,212**	**$ 2,862,210**	**$ 1,301,002**	**$ 4,163,212**	**$ -**	**68.8%**
Expenditures						
Salaries	$ 1,866,962	$ 1,013,228	$ 853,734	$ 1,866,962	$ -	54.3%
Other Compensation	64,500	30,331	34,169	64,500	-	47.0%
Related Benefits	672,749	275,218	397,531	672,749	-	40.9%
Total Personal Services	**$ 2,604,211**	**$ 1,318,777**	**$ 1,285,434**	**$ 2,604,211**	**$ -**	**50.6%**
Travel	260,000	78,862	181,138	260,000	-	30.3%
Operating Services	281,000	46,861	234,139	281,000	-	16.7%
Supplies	111,000	30,842	80,158	111,000	-	27.8%
Total Operating Expenses	**$ 652,000**	**$ 156,565**	**$ 495,435**	**$ 652,000**	**$ -**	**24.0%**
Professional Services	97,000	1,470	95,530	97,000	-	1.5%
Other Charges	711,876	1,122	710,754	711,876	-	0.2%
Debt Services		-	-	-		
Interagency Transfers	35,625	-	35,625	35,625	-	0.0%
Total Other Charges	**$ 844,501**	**$ 2,592**	**$ 841,909**	**$ 844,501**	**$ -**	**0.3%**
General Acquisitions	62,500	6,653	55,847	62,500	-	10.6%
Library Acquisitions		-	-			
Major Repairs		-	-			
Total Acquisitions/Major Repairs	**$ 62,500**	**$ 6,653**	**$ 55,847**	**$ 62,500**	**$ -**	**10.6%**
Scholarships		-	-			
Total Expenditures	**$ 4,163,212**	**$ 1,484,587**	**$ 2,678,625**	**$ 4,163,212**	**$ -**	**35.7%**

Southern University Baton Rouge Campus
General Operating Budget Interim Financial Statement
For Fiscal Year Ending June 30, 2025
As of January 31, 2025

	FY25 Budget	Actual	Projected	Total FY25	Over/(Under) Budget	% Actual to Budget
Revenues						
General Fund Direct	$ 28,649,563	$ 19,696,574	$ 8,952,989	$ 28,649,563	$ -	68.7%
Statutory Dedicated	6,507,266	5,591,951	915,315	6,507,266	-	85.9%
Federal	-	-	-	-	-	
Self Generated						
Tuition - Fall 2024	23,284,500	23,707,834	-	23,707,834	423,334	101.8%
Tuition - Spring 2025	20,396,500	20,334,944	-	20,334,944	(61,556)	99.7%
Tuition - Summer	4,321,800	2,501,678	522,066	3,023,744	(1,298,056)	57.9%
Out-of-State Fees	13,041,066	14,043,053	338,640	14,381,693	1,340,627	107.7%
Other	11,500,000	6,310,269	5,189,731	11,500,000	-	54.9%
Interagency Transfer	4,476,791	2,577,120	1,899,671	4,476,791	-	57.6%
Total Revenues	**$ 112,177,486**	**$ 94,763,423**	**$ 17,818,412**	**$ 112,581,835**	**$ 404,349**	**84.5%**
Expenditures						
Salaries	$ 50,052,036	$ 30,185,484	$ 19,526,552	$ 49,712,036	$ (340,000)	60.3%
Other Compensation	201,377	111,045	60,332	171,377	(30,000)	55.1%
Related Benefits	20,447,807	12,365,996	7,958,998	20,324,994	(122,813)	60.5%
Total Personal Services	**$ 70,701,220**	**$ 42,662,526**	**$ 27,545,881**	**$ 70,208,407**	**$ (492,813)**	**60.3%**
Travel	325,870	219,835	87,441	307,276	(18,594)	67.5%
Operating Services	10,864,049	6,381,868	3,394,993	9,776,861	(1,087,188)	58.7%
Supplies	909,411	566,060	145,352	711,412	(197,999)	62.2%
Total Operating Expenses	**$ 12,099,330**	**$ 7,167,762**	**$ 3,627,787**	**$ 10,795,549**	**$ (1,303,781)**	**59.2%**
Professional Services	1,101,480	738,977	167,504	906,480	(195,000)	67.1%
Other Charges	8,718,829	1,052,827	7,566,003	8,618,830	(99,999)	12.1%
Debt Services		-	-			
Interagency Transfers	6,953,717	2,525,918	4,427,799	6,953,717	-	36.3%
Total Other Charges	**$ 16,774,026**	**$ 4,317,722**	**$ 12,161,305**	**$ 16,479,027**	**$ (294,999)**	**25.7%**
General Acquisitions	62,032	-	62,032	62,032	-	0.0%
Library Acquisitions	137,649	55,448	55,133	110,581	(27,068)	
Major Repairs	62,000	33,700	28,300	62,000	-	54.4%
Total Acquisitions/Major Repairs	**$ 261,681**	**$ 89,148**	**$ 145,465**	**$ 234,613**	**$ (27,068)**	**34.1%**
Scholarships	12,341,229	14,784,240	79,999	14,864,239	$ 2,523,010	119.8%
Total Expenditures	**$ 112,177,486**	**$ 69,021,398**	**$ 43,560,437**	**$ 112,581,835**	**$ 404,349**	**61.5%**

Southern University Law Center
General Operating Budget Interim Financial Statement
For Fiscal Year Ending June 30, 2025
As of January 31, 2025

	FY25 Budget	Actual	Projected	Total FY25	Over/(Under) Budget	% Actual to Budget
Revenues						
General Fund Direct	$ 8,762,093	$ 6,023,942	$ 2,738,151	$ 8,762,093	$ -	68.8%
Statutory Dedicated	196,051	86,313	109,738	196,051	-	44.0%
Federal	-	-	-	-	-	
Self Generated						
Tuition - Fall 2024	5,376,930	4,425,834	-	4,425,834	(951,096)	82.3%
Tuition - Spring 2025	5,035,879	4,207,859	-	4,207,859	(828,020)	83.6%
Tuition - Summer	767,123	-	855,700	855,700	88,577	0.0%
Out-of-State Fees	4,913,227	4,614,331	468,750	5,083,081	169,854	93.9%
Other	4,324,708	3,383,988	338,220	3,722,208	(602,500)	78.2%
Interagency Transfer	-	-	-	-		
Total Revenues	**$ 29,376,011**	**$ 22,742,267**	**$ 4,510,559**	**$ 27,252,826**	**$ (2,123,185)**	**77.4%**
Expenditures						
Salaries	$ 13,847,907	$ 8,014,975	$ 5,832,932	$ 13,847,907	$ -	57.9%
Other Compensation	-	-	-	-	-	
Related Benefits	5,190,893	2,313,029	2,877,864	5,190,893	-	44.6%
Total Personal Services	**$ 19,038,800**	**$ 10,328,005**	**$ 8,710,795**	**$ 19,038,800**	**$ -**	**54.2%**
Travel	605,000	118,576	486,424	605,000	-	19.6%
Operating Services	3,557,235	647,352	786,698	1,434,050	(2,123,185)	18.2%
Supplies	325,000	129,373	195,627	325,000	-	39.8%
Total Operating Expenses	**$ 4,487,235**	**$ 895,301**	**$ 1,468,749**	**$ 2,364,050**	**$ (2,123,185)**	**20.0%**
Professional Services	750,000	216,607	533,393	750,000	-	28.9%
Other Charges	2,401,585	258,567	2,143,018	2,401,585	-	10.8%
Debt Services		-	-	-	-	
Interagency Transfers	375,554	314,588	60,966	375,554	-	83.8%
Total Other Charges	**$ 3,527,139**	**$ 789,762**	**$ 2,737,377**	**$ 3,527,139**	**$ -**	**22.4%**
General Acquisitions	722,837	-	722,837	722,837	-	
Library Acquisitions	300,000	221,974	78,026	300,000	-	74.0%
Major Repairs	300,000	-	300,000	300,000	-	
Total Acquisitions/Major Repairs	**$ 1,322,837**	**$ 221,974**	**$ 1,100,863**	**$ 1,322,837**	**$ -**	**16.8%**
Scholarships	1,000,000	307,516	692,484	1,000,000	-	30.8%
Total Expenditures	**$ 29,376,011**	**$ 12,542,558**	**$ 14,710,268**	**$ 27,252,826**	**$ (2,123,185)**	**42.7%**

Southern University New Orleans Campus
General Operating Budget Interim Financial Statement
For Fiscal Year Ending June 30, 2025
As of January 31, 2025

	FY25 Budget	Actual	Projected	Total FY25	Over/(Under) Budget	% Actual to Budget
Revenues						
General Fund Direct	$ 8,170,946	$ 5,617,529	$ 2,553,417	$ 8,170,946	$ -	68.8%
Statutory Dedicated	3,563,311	3,234,278	329,033	3,563,311	-	90.8%
Federal	-	-	-	-	-	
Self Generated						
Tuition - Fall 2024	3,637,296	3,527,562	-	3,527,562	(109,734)	97.0%
Tuition - Spring 2025	3,421,518	3,324,981	-	3,324,981	(96,538)	97.2%
Tuition - Summer	685,157	191,329	493,828	685,157	-	27.9%
Out-of-State Fees	688,151	835,088	4,452	839,540	151,389	121.4%
Other	5,153,295	2,196,075	255,005	2,451,080	(2,702,215)	42.6%
Interagency Transfer						
Total Revenues	**$ 25,319,674**	**$ 18,926,842**	**$ 3,635,734**	**$ 22,562,577**	**$ (2,757,098)**	**74.8%**
Expenditures						
Salaries	$ 11,545,993	$ 7,161,251	$ 4,160,317	$ 11,321,568	$ (224,425)	62.0%
Other Compensation	-	-	-	-	-	
Related Benefits	4,650,087	2,437,235	1,961,595	4,398,830	(251,257)	52.4%
Total Personal Services	**$ 16,196,080**	**$ 9,598,486**	**$ 6,121,912**	**$ 15,720,398**	**$ (475,682)**	**59.3%**
Travel	20,000	3,693	16,307	20,000	-	18.5%
Operating Services	3,519,190	2,434,001	803,965	3,237,966	(281,224)	69.2%
Supplies	84,000	8,643	33,615	42,258	(41,742)	10.3%
Total Operating Expenses	**$ 3,623,190**	**$ 2,446,337**	**$ 853,887**	**$ 3,300,224**	**$ (322,966)**	**67.5%**
Professional Services	39,916	59,784	63,375	123,159	83,243	
Other Charges	3,580,673	456,134	1,040,111	1,496,245	(2,084,428)	12.7%
Debt Services		-	-	-		
Interagency Transfers	1,579,815	627,114	588,654	1,215,768	(364,047)	39.7%
Total Other Charges	**$ 5,200,404**	**$ 1,143,032**	**$ 1,692,140**	**$ 2,835,172**	**$ (2,365,232)**	**22.0%**
General Acquisitions	-	-	-	-	-	0.0%
Library Acquisitions	50,000	1,999	-	1,999	(48,001)	4.0%
Major Repairs	-	-	-	-	-	
Total Acquisitions/Major Repairs	**$ 50,000**	**$ 1,999**	**$ -**	**$ 1,999**	**$ (48,001)**	**4.0%**
Scholarships	250,000	591,784	113,000	704,784	454,784	236.7%
Total Expenditures	**$ 25,319,674**	**$ 13,781,638**	**$ 8,780,938**	**$ 22,562,577**	**$ (2,757,098)**	**54.4%**

Southern University Shreveport Campus
General Operating Budget Interim Financial Statement
For Fiscal Year Ending June 30, 2025
As of January 31, 2025

	FY25 Budget	Actual	Projected	Total FY25	Over/(Under) Budget	% Actual to Budget
Revenues						
General Fund Direct	$ 6,993,605	$ 4,808,101	$ 2,185,504	$ 6,993,605	$ -	68.7%
Statutory Dedicated	383,716	286,313	97,403	383,716	-	74.6%
Federal		-	-			
Self Generated						
Tuition - Fall 2024	3,558,880	3,455,924	-	3,455,924	(102,956)	97.1%
Tuition - Spring 2025	3,007,983	3,003,462	26,530	3,029,992	22,009	99.8%
Tuition - Summer	537,371	272,863	264,508	537,371	-	50.8%
Out-of-State Fees	285,375	309,150	-	309,150	23,775	108.3%
Other	1,894,341	154,885	1,739,456	1,894,341	-	8.2%
Interagency Transfer						
Total Revenues	**$ 16,661,271**	**$ 12,290,698**	**$ 4,313,401**	**$ 16,604,099**	**$ (57,172)**	**73.8%**
Expenditures						
Salaries	$ 9,092,257	$ 4,805,368	$ 3,752,260	$ 8,557,628	$ (534,629)	52.9%
Other Compensation	-	-	-	-	-	0.0%
Related Benefits	3,994,945	1,910,920	1,669,715	3,580,635	(414,310)	47.8%
Total Personal Services	**$ 13,087,202**	**$ 6,716,288**	**$ 5,421,975**	**$ 12,138,263**	**$ (948,939)**	**51.3%**
Travel	43,000	19,986	23,014	43,000	-	46.5%
Operating Services	2,113,863	773,700	1,340,163	2,113,863	-	36.6%
Supplies	179,500	146,482	54,179	200,661	21,161	81.6%
Total Operating Expenses	**$ 2,336,363**	**$ 940,168**	**$ 1,417,356**	**$ 2,357,524**	**$ 21,161**	**40.2%**
Professional Services	-	144,802	143,698	288,500	288,500	
Other Charges	225,000	272,824	415,373	688,197	463,197	121.3%
Debt Services		-	-			
Interagency Transfers	912,706	926,969	-	926,969	14,263	101.6%
Total Other Charges	**$ 1,137,706**	**$ 1,344,595**	**$ 559,071**	**$ 1,903,666**	**$ 765,960**	**118.2%**
General Acquisitions	-	-	-	-	-	0.0%
Library Acquisitions	-	-	-	-	-	0.0%
Major Repairs	-	-	-	-	-	0.0%
Total Acquisitions/Major Repairs	**$ -**	**$ -**	**$ -**	**$ -**	**$ -**	0.0%
Scholarships	100,000	114,646	90,000	204,646	104,646	114.6%
Total Expenditures	**$ 16,661,271**	**$ 9,115,697**	**$ 7,488,402**	**$ 16,604,099**	**$ (57,172)**	**54.7%**

Southern University Agricultural Research and Extension Center
General Operating Budget Interim Financial Statement
For Fiscal Year Ending June 30, 2025
As of January 31, 2025

	FY25 Budget	Actual	Projected	Total FY25	Over/(Under) Budget	% Actual to Budget
Revenues						
General Fund Direct	$ 11,733,056	$ 8,066,473	$ 3,666,583	$ 11,733,056	$ -	68.7%
Statutory Dedicated	1,803,812	361,873	1,441,939	1,803,812	-	20.1%
Federal	13,654,209	2,171,072	1,483,137	3,654,209	(10,000,000)	15.9%
Self Generated						
Tuition - Fall 2024	-			-	-	
Tuition - Spring 2025	-			-	-	
Tuition - Summer	-			-	-	
Out-of-State Fees	-			-	-	
Other	-			-	-	
Interagency Transfer	-			-	-	
Total Revenues	**$ 27,191,077**	**$ 10,599,417**	**$ 6,591,660**	**$ 17,191,077**	**$ (10,000,000)**	**39.0%**
Expenditures						
Salaries	$ 7,317,638	$ 3,655,299	$ 3,662,339	$ 7,317,638	$ -	50.0%
Other Compensation	80,000	29,167	50,833	80,000	-	36.5%
Related Benefits	2,730,631	1,266,420	1,464,211	2,730,631	-	46.4%
Total Personal Services	**$ 10,128,269**	**$ 4,950,885**	**$ 5,177,384**	**$ 10,128,269**	**$ -**	**48.9%**
Travel	248,239	109,679	138,560	248,239	-	44.2%
Operating Services	949,115	253,605	695,510	949,115	-	26.7%
Supplies	883,616	423,367	460,249	883,616	-	47.9%
Total Operating Expenses	**$ 2,080,970**	**$ 786,651**	**$ 1,294,319**	**$ 2,080,970**	**$ -**	**37.8%**
Professional Services	635,800	118,734	517,066	635,800	-	18.7%
Other Charges	1,781,969	76,719	1,705,250	1,781,969	-	4.3%
Debt Services		-	-	-		
Interagency Transfers	209,697	-	209,697	209,697	-	0.0%
Total Other Charges	**$ 2,627,466**	**$ 195,453**	**$ 2,432,013**	**$ 2,627,466**	**$ -**	**7.4%**
General Acquisitions	1,354,372	72,484	1,281,888	1,354,372	-	5.4%
Library Acquisitions	-	-	-	-		
Major Repairs	11,000,000	751,541	248,459	1,000,000	(10,000,000)	6.8%
Total Acquisitions/Major Repairs	**$ 12,354,372**	**$ 824,025**	**$ 1,530,347**	**$ 2,354,372**	**$ (10,000,000)**	**6.7%**
Scholarships	-	8,396	(8,396)	-	-	
Total Expenditures	**$ 27,191,077**	**$ 6,765,410**	**$ 10,425,667**	**$ 17,191,077**	**$ (10,000,000)**	**24.9%**

Mission Statement

Through shared governance, leadership, and a diverse system of unique institutions, the mission of the Southern University and A&M College System is to deliver affordable world-class education, a trained workforce, state-of-the-art research, creative scholarship, and transformational public service to the State of Louisiana, the Nation, and the World.

LEGAL AFFAIRS COMMITTEE

(Following Finance Committee)
February 21, 2025

AGENDA

1. Call to Order
2. Roll Call
3. Adoption of the Agenda
4. Public Comments
5. Action Item(s)
   A. Request for Approval for the acquisition of a customized Aconity-MIDI Laser Powder Bed Fusion system (3D Printer) with multi-material capabilities by SUBR. This contract totals $1,008,559.00 which warrants board approval. (SUBR)

B. Adjournment

Members

Atty. Quincy Cawthorne – Chair Atty. Domoine Rutledge – Vice Chair, Miss Dana Bailey, Ms. Maple L. Gaines, Atty. Edwin Shorty, Mr. Henry Whitehorn, and Atty Tony Clayton – Ex Officio

Southern University and A&M College System
J.S. Clark Administration Building
4th Floor
Baton Rouge, Louisiana 70813

Office of The
President-Chancellor
(225) 771-4092

Fax Number
(225) 771-5522

February 5, 2025

Mr. Dennis J. Shields
President-Chancellor
J.S. Clark Administration Building, 4th Floor
Baton Rouge, LA 70813

RE: Aconityus, Inc (SUBR)

Dear President Shields,

This correspondence is regarding the attached Contract along with the Bid Documents between Aconityus, Inc. and Sothern University and A&M College. Said agreement has been reviewed and approved by The Office of General Counsel.

It is for the acquisition of a customized Aconity-MIDI Laser Powder Bed Fusion system (3D Printer) with multi-material capabilities by SUBR. This contract totals $ 1,008,559.00 which warrants Board approval.

Please let me know if you have any questions or concerns.

Thank you,

Christ Beaner
Associate General Counsel
Southern University System

REC'D-ACAD AFFRS
2025 FEB 5 AM9:27

SOUTHERN UNIVERSITY
AND AGRICULTURAL & MECHANICAL COLLEGE
Academic Affairs

3rd Floor, J.S. Clark Administration Building
Post Office Box 9820
Baton Rouge, Louisiana 70813
Office: 225-771-2360

Date: February 3, 2025

To: Ms Linda Antoine,
Director of Purchase

From: Patrick F. Mensah, Patrick Mensah
Senior Associate Vice Chancellor for Academic Affairs

RE: **Request to submit AconityUS Inc. Multi-Material Laser Powder Bed Fusion 3D Printer Requisition Documentation for Legal Review and SUS Board Approval**

This is to request that you submit for legal review and SUS Board approval the Multi-Material Laser Powder Bed Fusion purchase requisition and sole source documentation under preparation. Kindly do the necessary due diligence in reviewing and preparing needed documentation for submitting the purchase requisition and sole source justification to enable SU procure Multi-Material Laser Powder Bed Fusion equipment from AconityUS Inc. The funding for this equipment will be from the National Science Foundation Major Research Instrumentation award "MRI Track1: Acquisition of an Advanced Laser Powder Bed Fusion 3D Printer to Enhance Engineering Research and Education" awarded to Southern University (SU account number 222959).

Approved ☑ **Denied** ☐

John Pierre
John Pierre, Chancellor

2/5/25
Date

SOUTHERN UNIVERSITY
AND AGRICULTURAL & MECHANICAL COLLEGE

Purchasing Department

Purchasing Department
P.O. Box 9534
Baton Rouge, LA 70813
Phone: (225) 771-4580
Fax: (225) 771-2026

To: Christ Beaner
Associate General Counsel
Office of the President
Southern University System
CAMPUS

From: Linda Antoine
Director of Purchasing
Southern University Baton Rouge
CAMPUS

Date: February 5, 2025

Re: Request to submit approval to purchase AconityUS Inc. Multi-Material Laser Powder Bed Fusion 3D Printer for Legal Review and SUS Board Approval

Attached are following documents for review and for SU Board Approval:

- Approval letter from Chancellor Pierre to submit documents to Board of Supervisors
- Contract
- SU General Terms & Conditions
- Vendor's Quotation
- Sole Source Documents:
  (Letter, Patent information and Sole Source justification form from vendor, Letter and Sole Source justification form from Engineering Department, Sole Source justification forms from Purchasing Department)
  Sole Source Procurement complies with Louisiana Revised Statute 39:1597
- Louisiana vendor registration and W9
- College of Sciences & Engineering budget sheet

Please contact me if you need additional information,

STATE OF LOUISIANA ***Proposal Number 20250014***

PARISH OF EAST BATON ROUGE

CONTRACT
EQUIPMENT PURCHASE

This agreement made and entered into this 31st Day of JANUARY in the year Two Thousand Twenty-Five by and between Southern University and Agricultural and Mechanical College System-Agricultural Research and Extension Center, hereinafter termed the Owner, and ACONITYUS, INC., termed the Contractor. Witnessed, that the Owner and the Contractor, for the consideration hereinafter specified, agrees as follows:

1. Proposal/Quote # 20250014
2. Specifications, General Conditions, Terms & Conditions of Sales, Sole Source Documents, Patent Information, Installation Guidelines
3. Louisiana Vendor Registration, W9

are all hereby made a part of this contract to the same extent as if incorporated herein full.

The Contractor agrees to furnish all labor, materials, tools, equipment and all other things necessary to perform all work for the completion of:

3D PRINTER
(Build to Specifications)
MECHANICAL ENGINEERING DEPARTMENT

PAYMENT: The amount to be paid to the Contractor by Owner is One Million Eight Thousand Five Hundred Fifty Nine & 00/100 Dollars ($1,008,559.00).

PAYMENT TERMS: Payments will be made after completion of each milestone item.
20% after completion of electrical cabinet
20% after completion of process chamber
20% after completion of optical module
20% after delivery of complete system
20% after acceptance at customer
Payments shall be made within thirty (30) days after receipt of invoice. Delinquent payment penalties comply with **Louisiana R.S. 39:1695.**

COMPLETION: Completion time to build the 3D Printer is approximately twenty (20) weeks after receipt of purchase order and notice to proceed.

Taxes

Before the contract may be approved, La. R.S. 39:1624(A)(10) requires the Office of State Procurement to determine that the Contractor is current in the filing of all applicable tax returns and reports and in the payment of all taxes, interest, penalties, and fees owed to the state and collected by the Department of Revenue. The Contractor shall provide its seven-digit LDR Account Number to the State for this determination. The State's obligations are conditioned on the Contractor resolving any identified outstanding tax compliance discrepancies with the Louisiana Department of Revenue within seven (7) days of such notification. If the Contractor fails to resolve the identified outstanding tax compliance discrepancies within seven days of notification, then the using agency may proceed with alternate arrangements without notice to the Contractor and without penalty.

Termination for Cause

Should the Owner determine that the Contractor has failed to comply with the Contract's terms, the University may terminate the Contract for cause by giving the Contractor written notice specifying the Contractor's failure. If the Owner determines that the failure is not correctable, then the Contract shall terminate on the date specified in such notice. If the Owner determines that the failure may be corrected, the Owner shall give a deadline for the Contractor to make the correction. If the Owner determines that the failure is not corrected by the deadline, then the Owner may give additional time for the Contractor to make the corrections or the Owner may notify the Contractor of the Contract termination date.

Termination for Convenience

The Owner may terminate the Contract at any time without penalty by giving thirty (30) days written notice to the Contractor of such termination or negotiating with the Contractor a termination date. Contractor shall be entitled to payment for deliverables in progress, to the extent the Owner determines that the work is acceptable.

Remedies for Default

Any claim or controversy arising out of this contract shall be resolved by the provisions of LSA - R.S. 39:1672.2 - 1672.4.

Other Remedies

If the Contractor fails to perform in accordance with the terms and conditions of this Contract, or if any lien or claim for damages, penalties, costs and the like is asserted by or against the Owner, then, upon notice to the Contractor, the Owner may pursue all remedies available to it at law or equity, including retaining monies from amounts due the Contractor and proceeding against any surety of the Contractor.

Governing Law

This Contract shall be governed by and interpreted in accordance with the laws of the State of Louisiana, including but not limited to La. R.S. 39:1551-1736; rules and regulations; executive orders; standard terms and conditions, special terms and conditions, and specifications listed in the proposal (if applicable); and this Contract. Venue of any action brought, after exhaustion of administrative remedies, with regard to this Contract shall be in the Nineteenth Judicial District Court, Parish of East Baton Rouge, State of Louisiana.

E-Verify

Contractor acknowledges and agrees to comply with the provisions of La. R.S. 39:995 and federal law pertaining to E-Verify in the performance of services under this Contract.

Record Ownership

All records, reports, documents and other material delivered or transmitted to Contractor by the Owner shall remain the property of State, and shall be returned by Contractor to State, at Contractor's expense, at termination or expiration of the Contract. All material related to the Contract and/or obtained or prepared by Contractor in connection with the performance of the services contracted for herein shall become the property of State, and shall be returned by Contractor to State, at Contractor's expense, at termination or expiration of the Contract.

Contractor's Cooperation

The Contractor has the duty to fully cooperate with the State and provide any and all requested information, documentation, etc. to the state when requested. This applies even if this Contract is terminated and/or a lawsuit is filed. Specifically, the Contractor shall not limit or impede the State's right to audit or shall not withhold State owned documents.

Assignability

Contractor may assign its interest in the proceeds of this Contract to a bank, trust company, or other financial institution. Within ten calendar days of the assignment, the Contractor shall provide notice of the assignment to the State and the Office of State Procurement. The State will continue to pay the Contractor and will not be obligated to direct payments to the assignee until the State has processed the assignment.

Except as stated in the preceding paragraph, Contractor shall only transfer an interest in the Contract by assignment, novation, or otherwise, with prior written consent of the State. The State's written consent of the transfer shall not diminish the State's rights or the Contractor's responsibilities and obligations.

Right to Audit and Record Retention

Any authorized agency of the State (e.g. Office of the Legislative Auditor, Inspector General's Office, etc.) and of the Federal Government has the right to inspect and review all books and records pertaining to services rendered under this contract for a period of five years from the date of final payment under the prime contract and any subcontract. The Contractor and subcontractor shall maintain such books and records for this five-year period and cooperate fully with the authorized auditing agency. Contractor and subcontractor shall comply with federal and state laws authorizing an audit of their operations as a whole, or of specific program activities.

Fiscal Funding

The continuation of this contract is contingent upon the appropriation of funds to fulfill the requirements of the contract by the legislature. If the legislature fails to appropriate sufficient monies to provide for the continuation of the contract, or if such appropriation is reduced by the veto of the Governor or by any means provided in the appropriations act to prevent the total appropriation for the year from exceeding revenues for that year, or for

any other lawful purpose, and the effect of such reduction is to provide insufficient monies for the continuation of the contract, the contract shall terminate on the date of the beginning of the first fiscal year for which funds are not appropriated.

Mutual Indemnification

Each party hereto agrees to indemnify, defend and hold the other, its officers, directors, agents and employees harmless from and against any and all losses, liabilities and claims, including reasonable attorney's fees arising out of or resulting from the willful act, fault, omission, or negligence of the indemnifying party or of its employees, contractors, or agents in performing its obligations under this agreement, provided however, that neither party hereto shall be liable to the other for any consequential damages arising out of its willful act, fault, omission, or negligence.

Non-Discrimination

Contractor agrees to abide by the requirements of the following as applicable and amended: Title VI of the Civil Rights Act of 1964 and Title VII of the Civil Rights Act of 1964; Equal Employment Opportunity Act of 1972; Federal Executive Order 11246; the Rehabilitation Act of 1973; the Vietnam Era Veteran's Readjustment Assistance Act of 1974; Title IX of the Education Amendments of 1972; Age Discrimination Act of 1975; Fair Housing Act of 1968; and, Americans with Disabilities Act of 1990.

Contractor agrees not to discriminate in its employment practices, and shall render services under this contract without regard to race, color, religion, sex, sexual orientation, national origin, veteran status, political affiliation, disability, or age in any matter relating to employment. Any act of discrimination committed by Contractor, or failure to comply with these statutory obligations when applicable shall be grounds for termination of this contract.

Continuing Obligation

Contractor has a continuing obligation to disclose any suspensions or debarment by any government entity, including but not limited to General Services Administration (GSA). Failure to disclosed may constitute grounds for suspension and/or termination of the Contract and debarment from future Contracts.

Eligibility Status

Contractor, and each tier of Subcontractors, shall certify that it is not on the List of Parties Excluded from Federal Procurement or Non-procurement Programs promulgated in accordance with E.O.s 12549 and 12689, "Debarment and Suspension," as set forth at 24 CFR part 24.

Confidentiality

Contractor shall protect from unauthorized use and disclosure all information relating to the State's operations and data (e.g. financial, statistical, personal, technical, etc.) that becomes available to the Contractor in carrying out this Contract. Contractor shall use protecting measures that are the same or more effective than those used by the State. Contractor is not required to protect information or data that is publicly available outside the scope of this Contract; already rightfully in the Contractor's possession; independently developed by the Contractor outside the scope of this Contract; or rightfully obtained from third parties.

Under no circumstance shall the Contractor discuss and/or release information to the media concerning this project without prior express written approval of the State.

Amendments

Any modification to the provisions of this Contract shall be in writing, signed by all parties, and approved by the required authorities.

Prohibition of Discriminatory Boycotts of Israel

In accordance with R.S. 39:1602.1, for any contract for $100,000 or more and for any contractor with five or more employees, the Contractor certifies that neither it nor its subcontractors are engaged in a boycott of Israel, and that the Contractor and any subcontractors shall, for the duration of this contract, refrain from a boycott of Israel. The State reserves the right to terminate this contract if the Contractor, or any Subcontractor, engages in a boycott of Israel during the term of this contract.

Prohibition of Companies That Discriminate Against Firearm and Ammunition Industries

In accordance with La. R.S. 39:1602.2, the following applies to any competitive sealed bids, competitive sealed proposals, or contract(s) with a value of $100,000 or more involving a for-profit company with at least fifty full-time employees:
Unless otherwise exempted by law, by submitting a response to this solicitation or entering into this contract, the Bidder, Proposer or Contractor certifies the following:
The company does not have a practice, policy, guidance, or directive that discriminates against a firearm entity or firearm trade association based solely on the entity's or association's status as a firearm entity or firearm trade association;
The company will not discriminate against a firearm entity or firearm trade association during the term of the contract based solely on the entity's or association's status as a firearm entity or firearm trade association

Cybersecurity Training

In accordance with La. R.S. 42:1267(B)(3) and the State of Louisiana's Information Security Policy, if the Contractor, any of its employees, agents, or subcontractors will have access to State government information technology assets, the Contractor's employees, agents, or subcontractors with such access must complete cybersecurity training annually, and the Contractor must present evidence of such compliance annually and upon request. The Contractor may use the cybersecurity training course offered by the Louisiana Department of State Civil Service without additional cost or may use any alternate course approved in writing by the Office of Technology Services.

Code of Ethics

The Contractor acknowledges that Chapter 15 of Title 42 of the Louisiana Revised Statutes (R.S. 42:1101 et. seq., Code of Governmental Ethics) applies to the Contracting Party in the performance of services called for in this Contract. The Contractor agrees to immediately notify the state if potential violations of the Code of Governmental Ethics arise at any time during the term of this Contract.

Contract Approval

This contract is not effective until executed by all parties.

THUS DONE AND SIGNED AT Baton Rouge, Louisiana on the day, month and year first written above. IN WITNESS WHEREOF, the parties have executed this Agreement as of this date_____

WITNESSES SIGNATURES:

_____

_____

SOUTHERN UNIVERSITY AND A&M COLLEGE

BY;_____
Dennis J. Shields, President-President
Southern University and A&M College System

BY:_____

John K. Pierre-Chancellor
Baton Rouge Campus

CONTRACTOR

ACONITYUS, INC

WITNESS SIGNATURE:

BY:_____

PRINT NAME_____

TITLE _____

TAX I.D.#_____

EIN_____

SOUTHERN UNIVERSITY AND A&M COLLEGE
BATON ROUGE CAMPUS
GENERAL TERMS AND CONDITIONS

3D PRINTER
MECHANICAL ENGINEERING

1. **Standards of Quality**
Any product or service shall conform to all applicable federal, state and local laws, regulations and the Specifications. Unless otherwise specified, any manufacturer's name, trade name, brand name, or catalog numbers used in the specifications is for the purpose of describing the quality level, performance and characteristics required.

2. **Descriptive Information**
Bidders proposing an equivalent brand or model should submit information with bid (such as illustrations, descriptive literature, technical data) sufficient for the University to evaluate quality, suitability and compliance with the specifications. Failure to submit descriptive information may cause bid to be rejected. Any changes made to a manufacturer's published specification submitted for a product should be verifiable by the manufacturer.

3. **Prices**
Unless otherwise specified by the Purchasing Department, bid prices must be complete, including transportation, prepaid by bidder to destination. In the event of extension errors, the unit price shall prevail.

4. **Payment Terms**
Payment will be made per Milestones 1-5, 20% of overall amount after completion of each milestone item. Payments will be within thirty (30) days after receipt invoice. Delinquent payment penalties are governed by **L.R.S. 39:1695**.

5. **Vendor Invoices**
Invoices shall reference the Southern University purchase order number, vendor's packing list/delivery ticket, ticket number, shipping/delivery date, etc. Invoices are to be itemized and billed in accordance with the order and should show the amount of any prompt payment discount and submitted on the vendor's own invoice form. Invoices submitted by the vendor's supplier will not be accepted.

6. **Tax Information/State of Louisiana**
Vendor is responsible for including all applicable taxes in the bid prices. Southern University is exempt from all Louisiana state and local sales and use taxes. By accepting an award, resident and non-resident firms acknowledge their responsibility for the payment of all taxes duly accessed by the State of Louisiana and its political subdivisions for which they are liable, including but not limited to: franchise taxes, privilege taxes, sales taxes, use taxes, ad valorem taxes, etc. In accordance with Act Number 1029 of the 1991 Regular Session, effective September 1, 1991 state agencies will no longer be required to pay state sales tax.

7. **Fiscal Funding Clause (Renewal Contracts)**
In accordance with LA R.S.39:1615 (c) and (e), any contract entered into by the State of Louisiana and Southern University shall include the following Fiscal Funding Clause:
C. Termination due to unavailability of funds in succeeding years. When funds are not appropriated to support continuation of performance in a subsequent year of a multiyear contract, the contract for such subsequent year shall be terminated. When a contract is terminated under these conditions, no additional funds shall be paid to the contractor as a result of such action. **E.** With respect to all multiyear contracts, there shall be no provisions for a penalty to the state for the cancellation or early payment of the contract. The continuation of this contract is contingent upon the appropriation of funds to fulfill the requirements of the contract by the legislature. All proposers should be aware that our legislative process is such that it is often impossible to give prior notice of the non-appropriation of funds.

8. **Default of Contactor**
Failure to deliver within the time specified in the bid will constitute a default and may cause cancellation of the contract. Where the state had determined the contractor to be in default, the state reserves the right to purchase any or all products or services covered by the contract on the open market and to charge the contractor with cost in excess of the contract price. Until such assessed charges have been paid, no subsequent bid from the defaulting contractor will be considered.

9. **Applicable Law**

All contracts will be construed in accordance with and governed by the laws of State of Louisiana. Vendors shall comply with applicable laws of the State of Louisiana and Federal Laws where applicable, to include licenses, fees and permits. Vendors are responsible for the cost of licenses, fees and permits.

10. **Certification of No Suspension or Debarment ($25,000 or more)**
By signing and submitting this bid, bidder certifies that its company, any subcontractors, or principals thereof, are not suspended or debarred under federal or state laws or regulations. A list of parties who have been suspended or debarred by federal agencies is maintained by the General Services Administration and can be viewed on the internet at www.sam.gov.
__X__Federal Funded __Non-Federal Funded

11. **E-VERIFY** (verification of employees)
Contractor acknowledges and agrees to comply with the provisions of La R.S. 38:2212.10 and federal law pertaining to E-Verify in the performance of services under this contract.

12. **Prohibited Contractual Arrangements**
Per Louisiana R.S. 42:1113.a, no public servant, or member of such public servant's immediate family, or legal entity in which he is a controlling interest shall bid on or enter into any contract, subcontract, or other transaction that is under the supervision or jurisdiction of the agency of such public servant. See statute for complete law, exclusions and provisions.

13. **Discriminatory Boycotts of Israel**
This section applies to procurements with a value of $100,000 or more and for vendors with five (5) or more employees
Prohibition of Discriminatory Boycotts of Israel
In accordance with R.S. 39:1602.1, for any contract for $100,000 or more and for any contractor with five or more employees, the Contractor certifies that neither it nor its subcontractors are engaged in a boycott of Israel, and that the Contractor and any subcontractors shall, for the duration of this contract, refrain from a boycott of Israel. The State reserves the right to terminate this contract if the Contractor, or any Subcontractor, engages in a boycott of Israel during the term of this contract.

14. **Prohibition of Companies That Discriminate Against Firearm and Ammunition Industries**
In accordance with La. R.S. 39:1602.2, the following applies to any competitive sealed bids, competitive sealed proposals, or contract(s) with a value of $100,000 or more involving a for-profit company with at least fifty full-time employees:
Unless otherwise exempted by law, by submitting a response to this solicitation or entering into this contract, the Bidder, Proposer or Contractor certifies the following:
The company does not have a practice, policy, guidance, or directive that discriminates against a firearm entity or firearm trade association based solely on the entity's or association's status as a firearm entity or firearm trade association;
The company will not discriminate against a firearm entity or firearm trade association during the term of the contract based solely on the entity's or association's status as a firearm entity or firearm trade association.

15. **Mutual Indemnification**
Each party hereto agrees to indemnify, defend and hold the other, its officers, directors, agents and employees harmless from and against any and all losses, liabilities and claims, including reasonable attorney's fees arising out of or resulting from the willful act, fault, omission, or negligence of the indemnifying party or of its employees, contractors, or agents in performing its obligations under this agreement, provided however, that neither party hereto shall be liable to the other for any consequential damages arising out of its willful act, fault, omission, or negligence.

16. **Fair Labor Standards Act**
Contractor shall be in compliance with the **Fair Labor Standards Act 29 USC 201-6;** Establishes minimum wage, overtime pay, equal pay, recordkeeping, and child labor standards for employees or in the production of goods for interstate commerce. **By signing and submitting this bid, bidder certifies that its company, any subcontractors, or principals thereof** is in accordance with said compliance. **United States Department of Labor website: www.dol.gov/esa**

17. **Davis-Bacon Act ($2,000 or more) if applicable**
Contractor shall comply with the **Davis-Bacon Act, 40 USC 276A-7;** ensures that laborers and mechanics employed pursuant to federally funded construction contracts, subcontracts and construction under Federal grants, will be paid wages as determined by the U.S. Secretary of Labor. **By signing and submitting this bid, bidder certifies that its company, any subcontractors, or principals thereof** is in accordance with said compliance. **United States Department of Labor website: www.dol.gov/esa**

__X__Federal Funded _____Non-Federal Funded

18. **Small Business Entrepreneurship Programs**

The Southern University System is a participant in the Louisiana for the Small Entrepreneurships Program (the Hudson Initiative) and the Louisiana Initiative for Veterans and Service-Connected Disabled Veterans-Owned Business Small Entrepreneurships. Bidders are encouraged to consider participation. A list of certified vendors and additional information can be obtained from website http://www.ledsmallbiz.com. Potential participants may also register at this website. Businesses include minority and women.

19. **Tobacco-Free Policy**

The use of tobacco products on any Southern University campus is prohibited by students, staff, faculty or visitors in all campus buildings, facilities, or property owned or leased by Southern University System and outside areas of the campus where non-smokers cannot avoid exposure to smoke; on campus grounds, facilities, or vehicles that are the property of the University; and at lectures, conferences, meetings, and social and cultural events held on school property or school grounds. The sale or free distribution of tobacco products, including merchandise on campus or at school events is prohibited.

20. **Equal Opportunity Employer**

Southern University and A&M College Systems of the State of Louisiana is an equal opportunity employer and looks to its contractors, sub-contractors, vendors, and suppliers to take affirmative action to effect this commitment in its operations. By submitting and signing this bid, the bidder certifies that he agrees to adhere to the mandates dictated by Title VI and VII of the Civil Rights Act of 1964, as amended; the Vietnam Era Veterans' Readjustment Assistance Act of 1974; Section 303 of the Rehabilitation Act of 1973; Section 202 of Executive Orderll24b,as amended; and the Americans with Disabilities Act of 1990. Bidder agrees that he will not discriminate in the rendering of services to and/or employment of individuals because of race, color, religion, sex, age, national origin, handicap, disability, veteran status, or any other non-merit factor. Bidder further agrees to keep informed of and comply with all Federal, State, and local laws, ordinances, and regulations which affect his employees or prospective employees. Any person who is a "Qualified Individual with a Disability" as defined by 42 USC 12131 of the American with Disabilities Act who has submitted a bid on this procurement and who desires to attend the bid opening, must notify this office in writing no later than seven (7) working days prior to the bid opening date of their need for special accommodations. If the requested accommodations cannot be reasonably provided, the individual will be so informed prior to the bid opening.

21. **Code of Ethics**

The contractor acknowledges that Chapter 15 of Title 42 of the Louisiana Revised Statutes (R.S. 42:1101 et. seq., Code of Governmental Ethics) applies to the Contracting Party in the performance of services called for in this contract. The contractor agrees to immediately notify the state if potential violations of the Code of Governmental Ethics arise at any time during the term of this contract.

22. **Vendor Forms/SU Signature Authority**

The terms and conditions of the SU solicitation and purchase order/contract shall solely govern the purchase agreement, and shall not be amended by any vendor contract, form, etc. The University's chief procurement officer, or designee, is delegated sole authority to execute any vendor contracts, forms, etc. Departments are prohibited from signing any vendor forms.

23. **Termination of the Contract for Convenience**

The State/University may terminate the contract at any time by giving thirty (30) days written notice to the Contractor of such termination or negotiating with the Contractor an effective date. The Contractor shall be entitled to payment for deliverables in progress, to the extent work has been performed satisfactorily.

24. **Termination for Cause**

The State may terminate this Contract for cause based upon the failure of the Contractor to comply with the terms and/or conditions of the Contract; provided that the State shall give the Contractor written notice specifying the Contractor's failure. If within thirty (30) days after receipt of such notice, the Contractor shall not have either corrected such failure or thereafter proceeded diligently to complete such correction, then the State may, at its option, place the Contractor in default and the Contract shall terminate on the date specified in such notice. The Contractor may exercise any rights available to it under Louisiana law to terminate for cause upon the failure of the Owner to comply with the terms and conditions of this contract; provided that the Contractor shall give the State written notice specifying the State's failure and a reasonable opportunity for the Owner to cure the defect.

25. **Auditors**

It is hereby agreed that the Legislative Auditor of the State of Louisiana and/or the Office of the Governor, Division of Administration auditors shall have the option of auditing all accounts of contractor which relate to this contract.

26. **Awarded Products/Unauthorized Substitutions**

Only those awarded brands and numbers are approved for delivery, acceptance, and payment purposes. Any substitutions require prior approval of the Purchasing Office. Unauthorized product substitutions are subject to rejection at time of delivery, post-return at vendor's expense, and non-payment.

27. ***Anti-Kickback Clause***

The Contractor hereby agrees to adhere to the mandate dictated by The Copeland "Anti-Kickback" ACT which provides that each Contractor or Subgrantee shall be prohibited from inducing, by any means, any person employed in the completion of work, to give up any part of the compensation to which he is otherwise entitled.

28. ***Clean Air Act***
The Contractor hereby agrees to adhere to the provisions which require compliance with all applicable standards, orders or requirements issued under Section 306 of the CLEAN AIR ACT which prohibits the use under non-exempt contracts, grants or loans of facilities included on the EPA list of Violating Facilities.

29. ***Clean Water Act***
The Contractor hereby agrees to adhere to the provisions which require compliance with all applicable standards, orders or requirements issued under Section 508 of the Clean Water Act which prohibits the use under non-exempt federal contracts, grants or loans of facilities included on the EPA list of Violating Facilities.

30. **Energy Policy and Conservation Act**
The Contractor hereby recognizes the mandatory standards and policies relating to energy efficiency which are contained in the State energy conservation plan issued in compliance with the Energy Policy and Conservation Act (P.L. 94-163).

31. ***Anti-Lobbying and Debarment Act***
The Contractor will be expected to comply with federal statutes in the Anti-Lobbying Act and The Debarment Act.

COMPANY_____

ADDRESS_____

TELEPHONE_____

EMAIL_____

TAX ID NUMBER_____

DUNS NUMBER_____

SIGNATURE_____
Company's authorized signature

PRINT NAME_____

AconityUS, Inc.
501 George Perry Blvd Ste E
El Paso, TX 79925 US
+19152342643
info@aconityus.com
www.aconityus.com

aconityUS

ADDRESS
Southern University and A&M College
Baton Rouge, LA 70807

SHIP TO
Congyuan Zeng
Southern University and A&M College
Baton Rouge, LA 70807

QUOTE 20250014

DATE 01/28/2025

EXPIRATION DATE 02/14/2025

SHIP DATE	SHIP VIA	ANNEX A	ANNEX B	ANNEX C
06/15/2025	DAP, Incoterms 2020	Scope of Work	AconityUS Terms and Conditions	Quote Terms and Conditions

SKU - DESCRIPTION	QTY	RATE	AMOUNT
Milestone 1 - 20% of Overall amount Completion of Electrical Cabinet: Controlling · Electrical enclosure with controlling unit o 4 additional digital I/O ports for customer specific extension of the SLM system · Software: AconitySTUDIO o Freely programmable process sequence o Open access to nearly all SLM relevant process parameters o Integration of further sensors by configurable APIs Certification · Documentation · On site setup and acceptance test · On site training of max. 2 days during installation	1	201,711.80	201,711.80

	QTY	RATE	AMOUNT
Milestone 2 - 20% of Overall amount Completion of Processing Chamber:	1	201,711.80	201,711.80

Processing Chamber

· Diameter build platform Ø = 250 mm
· Maximum vertical displacement of build platform
≤ 250 mm
· Fume extractor ≤ 150 m³/h
· External filter unit
· Powder deposition with exchangeable rubber, knife or
brush unit
· O2 sensor 10 – 210,000 ppm measurement range
· Pressure sensor
· Flow rate sensor

Multi-material Recoater:

·Powder: 3 powders can simultaneously be patterned
·Patterning area of 115 x 180 mm (XY)
·Patterning layer thickness from 100 microns up to 250 microns (material dependent)
·Recoating speed: 50 mm / second
·Powder pixel resolution of 300 microns
·Integrated powder reservoirs of 250 ML for each drum
·Integrated powder refill unit
·Controlling SW and interface
·Max operational temperature of the recoater is 80°C

Controlled Volume Flow Extraction:

·Integration of volume flow meter for measurement of the Argon flow
·Automated control of volume flow of fume extraction within AconitySTUDIO

Passivation and Cleaning of Filter

·Automated passivation of filter unit for reduced flammability of filter element
·Integration of pressure shock operated filter cleaning for increased filter lifetime

Process Monitoring Off-axis:

Resolution: 640 x 480 pixels
Frame rate:
30 Hz at 640 x 480 px
125 Hz at 640 x 120 px

Sensor: Microbolometer
ROI: Whole Substrate Plate
Spectral range: 8 - 14 µm
Temperature range: 150 - 900 °C
Software integration for the display of live view AconitySTUDIO

Accessories:
Analysis and evaluation software

Note: This option is not compatible for simultaneous use with the following other options:
·Vacuum option
·Hight-temperature preheating
·Micro option
·Preform detection

Substrate Preheating:

·Maximum temperature: 500 °C
·Size of build platform: Ø 250 mm
·Effective Build Height: 180 mm
·Active water cooling
oBuild plane
oBuild cylinder

SKU - DESCRIPTION	QTY	RATE	AMOUNT
Milestone 3 - 20% of Overall amount Completion of Optical Module	1	201,711.80	201,711.80

3D Scanning Device:
·Focus variation Single Mode Fiber Laser: 80 - 500 µm
·Including controller card
·Including integration in controlling unit and controlling with AconitySTUDIO software

Vertical Displacement of Optics:
·400 mm vertical displacement

Process Monitoring On-axis - HS camera:
·Resolution: 320 x 320 px
·Frame rate: 5 kHz
·Sensor: CMOS
·ROI: Laser proximity
·Illumination laser

Process Monitoring On-axis - 2 Color Pyrometer:
·Two High-Speed pyrometers for one 3D Scanner
·Frame rate: 100 kHz
·ROI: Laser proximity
·Spatially resolved heat emission map

1200W AFX Laser:
Programmable 7-Step Intensity Profile (Single Mode Gauss to Multi Mode Ring)
·Wavelegngth: 1070 ± 10 nm
·Nominal Power Single Mode: 1200 W
·Nominal Power Multi Mode: 1200 W
·Minimal spot size Single Mode Gauss: 130 µm
·Maximal spot size Multi Mode Ring: 390 µm
·Operation Mode: CW
·Cooling Method: Water

·Integrated for use with AconitySTUDIO

Laser Proof Enclosure:
·Test class T3 according to Machinery Directive 2006/42/EC

SKU - DESCRIPTION	QTY	RATE	AMOUNT
Milestone 4 - 20% of Overall amount Delivery and Installation/Commissioning of System	1	201,711.80	201,711.80

Air Delivery:
AconityMIDI+
Multi-material recoater

Air- water chiller:
- 81 L water capacity
- 15 kW cooling capacity
- Voltage:

o400 V / 3 Ph / 50 Hz
o460 V / 3 Ph / 60 Hz

- Noise level: 70 dB
- Power consumption: 14 kW

Multi-Material Acceptance Starter Kit:
·5 kg powder (1.4404)
·5 kg powder (CuCrZr)
·5 kg powder (CuSn10)
·3 x substrate plates (1.4404)
·Acceptance parameter set (1.4404)
·Acceptance parameter set (CuCrZr)
·Acceptance parameter set (CuSn10)
·1 x brush, 1 x spatula, 1 x scoop
·1 x package rubber gloves
·1 x disposable respiratory protection

Acceptance Starter-kit:
·20 kg aluminium powder (AlSi10Mg)
·3 x substrate plates (Aluminum)
·Acceptance parameter set for aluminium (AlSi10Mg)
·1 x brush, 1 x spatula, 1 x scoop
·1 x package rubber gloves
·1 x disposable respiratory protection

Country of origin: Germany
HTS/Tariff: 8485.90.9000

Tariff fees:
Customs import clearance fee for Aconity LPBF system under DAP shipping terms.

Note: Estimated cost that will be billed as per final charges incurred.

SKU - DESCRIPTION	QTY	RATE	AMOUNT
Milestone 5 - 20% of Overall amount Acceptance by customer	1	201,711.80	201,711.80

AconitySERVICE Bronze:
Scope of the package:
- Aconity3D Knowledge Base: included
- Technical Support: Ticket creation
  + support within 24h
  - o 3 user included
  - o 20 hours of effort included
- Spare Parts: 15 % Discount
- Utilization-Kit: One kit included
- Machine Service: Once per year
- Minimum Term: 1 year

Warranty:
Extension of warranty by 12 months exceeding the initial 12 months for maximum of 3 years
·Hardware change included
·Travel included

Certification:
- Documentation
- On site setup and acceptance test
- On site training of max. 2 days during installation

General terms and conditions apply. Errors and misprints excepted.

The client shall indemnify the supplier against all third-party claims arising from product liability.

Please send your purchase order within the validity period of this offer to:
sales@aconityus.com
Subject: Quote consists of a pre-configured Aconity LBM system. Further options according to Annex A.
Terms of payment: Payments shall be made by client within 30 days w/o discount upon receipt of an invoice as follows:

- 20% after completion of electrical cabinet
- 20% after completion of process chamber
- 20% after completion of optical module
- 20% after delivery of complete system
- 20% after acceptance at customer

Payments shall be made w/o cash discount and with an indication of the invoice number to the account designated by AconityUS.

SUBTOTAL	1,008,559.00
TAX	0.00
TOTAL	USD 1,008,559.00

aconityUS

January 28th, 2025

Linda Antoine, Director
Southern University and A&M College
Purchasing Department
J. S. Clark Administration Bldg. Annex 1st Floor
James L. Prestage Drive
Baton Rouge, LA 70813

Subject: Letter of Support for Sole Source Form for Equipment Acquisition

Dear Ms. Antoine,

This letter is submitted by AconityUS in support of the Sole Source Form already in file for the acquisition of a customized Aconity***MIDI+*** Laser Powder Bed Fusion (LPBF) system with multi-material capabilities by Southern University and A&M College at Baton Rouge (SUBR).

The Aconity3D platform offers several advantages that will enable state-of-the-art research at SUBR; while many LPBF systems are available by several OEMs, these machines are more aimed at a production environment and are not well suited for research and development. Commercial LPBF machines lack an open architecture that allows for the adjustment of process relevant parameters in situ and in real-time, significantly limiting the exploration of the technology for advanced research in new material systems and other fields of interest in additive manufacturing. This is possible in the Aconity3D platform through the in-house developed controlled software Aconity***STUDIO***, that allows for modification of many of the laser exposure parameters, including laser power, velocity, focus level, modulation, etc.

By contrast, Aconity3D's LPBF offers a modular and open architecture platform with a plethora of strengths that make it a game-changer for research in additive manufacturing. Each machine is produced and customized to meet customer requirements with standard and optional modules. The platform provides modularity which means future capability can be added as retrofits (Patent 115118WOUS is applicable to the modularity capability). Specifically relevant to SUBR, this Aconity***MIDI+*** system quoted is configured with the following:

- **Multi-laser capability**: the system will initially be fitted with a single AFX 1200W laser from nLight, but it provides room for expansion for up to 3 more lasers. Patent 118309WOUS is associated with the multi-laser calibration needed for this multi-laser capability.

- **Beam Shaping capability:** The AFX laser allows to vary the intensity profile of the laser from a typical Gauss into 6 different modes, including the "Ring" or "Corona" beam which has been employed to research microstructural control in AM parts.

- **On-axis monitoring:** both a CMOS high speed camera and dual pyrometry options to observe and measure the interactions of the laser energy and material at the melt-pool level. These systems are located coaxial to the optics of the 3D scanning device used to steer the laser. Patent

aconity US

118309WOUS is also applicable to this item since the on-axis monitoring is a requirement for the multi-laser calibration

- **3D Scanning Optics:** this system includes a 3D scanning device developed by Aconity3D's which allows to vary the focal plane of the laser beam, hence allowing for larger spot sizes that can also be employed in materials processing research. Patent 118309WOUS is also applicable to this item since Aconity3D's 3D scanning device is designed to enable the multi-laser capability.

- **Substrate heating:** the system is configured with a low temperature resistive heating module capable of temperatures up to 500°C. Substrate heating offered for other similar LPBF systems is typically limited to temperatures in the range of ~200°C. Furthermore, a 1000°C induction heating can be retrofitted into the system in a future configuration. Aconity3D was an early licensee from a patent from Fraunhoffer ILT for elevated temperature over 200°C. Currently, Aconity3D continues to provide this capability.

- **Multi-material LPBF:** finally, the system will feature a multi-material recoater capable of depositing up to three materials into the powder bed, which can be exposed with independent laser parameters through the Aconity***STUDIO*** software. While other approaches for multi-material LPBF are available, the recoater in the Aconity***MIDI+*** is an exclusive commercially available feature through the joint work of Aconity3D with Schaeffler-Aerosint. Patent 115119WOUS related to flexible axes in an LPBF system, which is a precondition and needed for enabling the multi-material capability.

Sincerely,

César Terrazas-Nájera, Ph.D.
Managing Director
501 George Perry Blvd. Suite E | El Paso, Texas 79925-4432, USA
www.aconity3d.com

SOUTHERN UNIVERSITY
AND AGRICULTURAL & MECHANICAL COLLEGE

MECHANICAL ENGINEERING DEPARTMENT

College of Sciences & Engineering
Post Office Box 9969
Baton Rouge, LA 70813
Office: (225) 771-2718
www.subr/edu/ME

Tuesday, December 17th, 2024
Ms. Linda Antoine, Director of Purchasing
Southern University and A&M College
Baton Rouge, LA 70813

RE: Sole source justification for the purchase of a 3D printer for metals from AconityUS.

Dear Ms. Antoine:

This is to justify purchase of a 3D printer for metals solely from AconityUS. The printer is to be funded by the MRI grant entitled "Acquisition of a Multi-material Laser Powder Bed Fusion Equipment for Advanced Manufacturing Research and Education."

While state-of-the-art Laser Powder Bed Fusion (LPBF) machines are being offered by many system manufacturers, these machines are more aimed at a production environment and are not well suited for research and development. Commercial selective laser melting machines lack an open architecture that allows for the adjustment of process relevant parameters in situ and in real-time, which is a significant limitation preventing the development of processing parameters for new alloys.

Aconity3D's open architecture LPBF platform boasts a plethora of strengths that make it a game-changer for research in additive manufacturing. Each machine can be customized to meet customer requirements with standard and optional modules. The following is a list of options that users can select (**options selected for purchase are in bold face**):

- **Single** or **multi-laser capability** – For multi-laser systems such as the AconityMIDI each laser can be specified individually with a given power (400, 500, 700, 1000, or **1200 Watts). AconitySTUDIO** can be used to control the percentage of power delivered by each laser depending on the application
- Exchangeable process chambers – both the MIDI and **MIDI+** provide exchangeable process chambers to reduce cleaning effort or facilitate material isolation workflows.
- **Preheating capabilities – resistive heating in the modalities of 500C** and 800C or induction preheating to a maximum of 1200C are options available enabling processing of a wide range of materials including refractories.
- **Build reducing envelopes** – depending on the system selected, reducing envelopes can be provided. Reducing envelopes depend on the system configuration including **reductions of the exposure area to diameters of** 170mm, 100mm, **55mm** and 25mm.
- **Monitoring options – both off-axis** and **on-axis systems** are provided, providing the tools for process understanding at different levels: either **the entire processing area**, or **localized to the meltpool emissions.** Meltpool monitoring sensors provided by Aconity3D can serve as feedback to control the deposition process.
- **Multi-material printing – through a collaboration with Aerosint,** both 2 and **3 material recoaters are available enabling multi-material printing.**
- Micro LPBF – the vibration assisted deposition of fine powders <10um average PSD coupled with advances in optics and laser modulation enable creation of very fine structures.

If you have any questions regarding this matter, please let me know. I can be reached by telephone at (225) 397-3683 or by email at sanjay.kodiyalam@sus.edu. Thank you in advance for your kind assistance.

Sincerely,

K. Sanjay

Sanjay Kodiyalam
Laboratory Technician, Mechanical Engineering, SUBR
Rm 365 Pinchback Engineering Building, Robert E. Smith Boulevard
Baton Rouge, Louisiana 70813
Cell: (225) 397 3683, Office: (225) 771 2718

LEALON L. MARTIN, DEAN, COLLEGE OF SCIENCES AND ENGINEERING, SUBR

DENNIS J. SHIELDS, PRESIDENT, SUS

JOHN K. PIERRE, CHANCELLOR, SUBR

DESIREE' HONORE' THOMAS, ASSOCIATE VP AND SENIOR ADMINISTRATIVE OPERATIONS OFFICER, SUS

Numbers 1-4 for Department's Use
Number 5-7 for Vendor's Use

SOUTHERN UNIVERSITY
Purchasing Department
Sole Source Justification Form

Department Mechanical Engineering, SUBR

Name of Person Submitting Form Sanjay Kodiyalam

Title of Above Person Mechanical Engineering Laboratory Technician

1) Identify items or services to be approved for Sole Source Treatment: (Use additional sheet if necessary)

2) Name of manufacturer of item(s): AconityUC, Inc.

3) Identify single source supplier:
   A) Name of Supplier AconityUC, Inc.
   B) Mailing Address 501 George Perry Blvd Ste E, El Paso, TX 79925 US
   C) Phone Number (915) 234-2643
   D) Fax Number (915) 234-2643

4) If purchase related to compatibility with existing equipment, then identify the item(s) and applicable tag number of State equipment: N/A

5) Sole Source Considerations (Place a check next to the one that best applies)
   A) [X] Exclusive Rights…Item under patent or copyright held by a single vendor and item possesses functions or capabilities critical to use
   B) [X] Property Design Item possesses a unique function or capacity critical in the use of the item and not available from any other – Patent No: US 11,331,849 B2
   C) [] Replacement Equipment The purchase is for equipment associated with use of the existing equipment where compatibility is essential for integrity of results
   D) [] Replacement Parts The purchase is for replacement parts needed for repair of existing equipment where compatibility with equipment from the original manufacturer is paramount
   E) [] Replacement Accessories The purchase is for accessories sought for enhancement of existing equipment where compatibility with equipment from the original manufacturer is paramount
   F) [] Technical Service The purchase is for technical services associated with the assembly, installation or servicing of equipment of a highly technical or specialized nature
   G) [] Continuation or Prior Work Additional item, service or work required, but not known to have been needed when the original order was placed with vendor (need original purchase order #) _____
   H) [] Exclusive Capability Only one vendor qualified (no other potential vendors)
   I) [] Other Provide details

6) Replacement Equipment, Parts or Accessories (Place a check next to the one that best applies)
   A) [] The item is manufactured or produced by the supplier and the supplier solely distributes (sells) direct to the customer.
   B) [] The item is produced by the manufacturer, but not sold directly to the customer by the manufacturer, and the manufacturer solely distributes the item through a single supplier in the world, United States, region, Louisiana or identified market.

Note: If item is available from more than one supplier, the item can be treated as proprietary, but must be competitively solicited from multiple sources of supply.

7) I thereby declare the information provided herein to be true and accurate to the best of my knowledge. I understand any false or misleading information may be considered a violation under the Louisiana Procurement Code and can subject me to prosecution and penalty under LaR.S. 39:1679.

Vendor Signature _____ Date 11/27/2024

Title Managing Director

Evidence of signature authority shall be required in accordance with Louisiana R.S. 38:2212(a)(1)(c) and/or R.S.39:1594 (c)(2)(d)

SOLE SOURCE/PROPRIETARY PURCHASE

Agency: SOUTHERN UNIVERSITY AND A&M COLLEGE

Indicate if sole source or proprietary: Sole Source X Proprietary ☐

Sole Source/Proprietary Product or Service: **AconityMIDI+ customized Laser Beam Melting (LBM) system**

Vendor name, address and telephone Number: **AconityUS, Inc., 501 George Perry Blvd Ste E, El Paso, TX 79925 US**

Sole source and proprietary purchases are allowed by the Louisiana Procurement Code (La. R.S. 39:1551 *et.seq.)* when certain conditions exist. This form may be used to justify sole source or proprietary purchases for unique products, services or conditions or you may write a letter that addresses each point. This will become a part of the permanent record for this purchase.

A **sole source** justification represents a request from the end user for the Office of State Procurement to waive the bid process in accordance with La. R.S. 39:1597 and L.A.C. 34:I.901-907. For the purpose of this form, the particular item or service is available from only one supplier (usually the manufacturer) and is unique in that no other will be suitable or acceptable to meet the need.
AconityUS, Inc. is the sole distributor of the Aconity3D LPBF platform to include the AconityMIDI+. Aconity3D GmbH is the sole manufacturer.

A **proprietary** specification justification represents a request from the end user to limit the specification to describe a product proprietary to one supplier in accordance with La. R.S. 39:1655 and meets the definition and use described in L.A.C. 34:I.309. A proprietary purchase is similar to a sole source when no other product or service is suitable or acceptable to meet the need, but there is more than one potential bidder because the manufacturer has chosen to sell their product through multiple distributors. A proprietary purchase is considered competitive and the solicitation shall include language indicating the purchase has been approved as proprietary and not invite bids for equal products.

Reading the above, it seems only sole source is necessary; AconityUS is the subsidiary and sole distributor of Aconity3D GmbH.

1. Explain specification requirements and how or why ONLY the designated product/service meets the need. Cite the qualities/features that make this product or service unique in meeting the need.

The focus of this 3D printing research-grant based purchase is multi-material laser powder bed fusion (MM L-PBF). While there are other vendors for 3D printers, there are none that can simultaneously handle and build using three different metal powders as raw materials.

The Mechanical Engineering Department at SUSBR intends to purchase laser powder bed fusion (LPBF) for conducting research in various research areas that include new metallic alloy development, multi-material metal 3D printing, etc. Currently, the AconityMIDI+ platform is the only commercial system in the US with 3 material recoating capabilities allowing for up to three material LPBF prints. Besides this, the following main points of the system include:

- **Open architecture** - While many other vendors of LPBF technology exist, the Aconity3D platform is the only one conceived with an open-architecture model to enable material research and discovery. Compared to other OEMs, the Aconity3D LPBF platform provides full access, through its in-house developed controller software AconitySTUDIO, and control to the laser exposure parameters such as laser power, velocity, degree of defocus, emission mode, etc., and of other processing parameters such as material layer thickness. Without additional cost, users get access to Aconity3D's library of processing parameters for materials that can be employed to kick-start research into a particular alloy system. Also, standard protocols for data transfer can be extracted from log files generated by the system and sensor equipment (pyrometers, cameras, thermocouples, etc.) for data analysis.

- **Customization** – from the start, the LPBF can be customized according to the needs of a given customer. Once a base LPBF system is selected, many options are available to be selected by customers including the laser type, multi-laser capability, multi-material, sensors, and even the potential for customer specific efforts to adapt ports in the main system for sensor customization, the accommodation of customer sourced laser scanning devices, etc.

- **Modularity** - Aconity3D's LPBF platform also offers modularity at its core. This means that optional modules can be added to the system in the future, including more than one laser source, options for off-axis or on-axis monitoring of the process, additional processing chambers, substrate preheating modules, vacuum module, micro LPBF processing module, etc.

2. Specifically name, by manufacturer and model or service provider, other products or services investigated (if fewer than two, explain).

Approaches for multi-material printing in LPBF are available but these do not allow the degree of control afforded by the multi-material recoater provided in the Aconity3D platform. Specifically, the AconityMIDI+ is the only commercially available 3-material LPBF system in the US.

- Nikon - SLM Solutions provides a capability for 2 materials to be printed, however, these does not afford control of the materials deposition in-layer.
- Similarly, Schaeffler, which acquired the rights for the Aerosint AG recoater, provides machinery for multi-material 3D printing but relying on binder jetting 3D printing, rather than LPBF.

3. State specifically why and how other products investigated are deficient in meeting the need.

As discussed above, other approaches for multi-material metal 3D printing might be available. However, the typical architecture (closed access to modifying process parameters) make the Aconity3D platform a more suitable landscape for performing research in multi-material systems. Further, the offer of Aconity3D for integrated on-axis sensors and the AconityCONTROL scheme, allow researchers the tool for monitoring as well as the implementation of advanced scanning strategies that can lead to material discovery.

4. Sole Source - Obtain signed letterhead quotation and declaration of sole source from corporate marketing (not sales representative) stating product or service is not sold through distributors, attach a notarized or published price list or retail price verification for the item(s), and submit all documents to the Purchasing Department

OR

Proprietary –

K. Sanjay

Signature and Title of Requisitioner-Southern University
Dr. Sanjay Kodiyalam, Laboratory Technician, Mechanical Engineering, SUBR

12/17/2024
Date

Vendor
Dr. Cesar A. Terrazas-Najera, Managing Director, AconityUS, Inc.

12/17/2024
Date

SOUTHERN UNIVERSITY
AND AGRICULTURAL & MECHANICAL COLLEGE
Purchasing Department

Purchasing Department
P.O. Box 9534
Baton Rouge, LA 70813
Phone: (225) 771-4580
Fax: (225) 771-2026

SOLE SOURCE JUSTIFICATION

Equipment:
3D PRINTER

The College of Engineering requested A 3D Printer for research and training from AcronityUS, LLC.

AcronityUS, LLC has exclusive rights. In addition, the features are unique and AcronityUS, LLC. has a patent. The Patent Number is US 11,331,849 B2 dated May 27, 2022.

Based on the required specifications and the documents submitted by the vendor certifying the company as the sole source, this request shall be processed as Sole Source Procurement.

No other vendors were searched because AcronityUS, LLC has the patent for the equipment, software and other design work.

Vendor:
ACONITYUS, LLC
501 GEORGE PERRY BLVD., SUITE E
EL PASO, TEXAS 79025

Approved Linda Antoine 1/27/25
Linda A. Antoine
Director of Purchasing

SOUTHERN UNIVERSITY
AND AGRICULTURAL & MECHANICAL COLLEGE
Purchasing Department

Purchasing Department
P.O. Box 9534
Baton Rouge, LA 70813
Phone: (225) 771-4580
Fax: (225) 771-2026

SOLE SOURCE CHECKLIST

Type or Equipment or Services:
ED PRINTER

Vendor:
ACONITYUS, LLC
501 GEORGE PERRY BLVD, SUITE E
EL PASO, TEXAS 79025

Letter approved by the Director of Purchasing and from requestor to include:
__Y__ Justification/explanation of why specific product/service/repair is the only one that will meet their need. What qualities or features make it unique to meet their need? Is the uniqueness substantially related to the intended purpose, use and/or performance? Other goods or services cannot perform the desired objectives.

Vendor Requirements

Letter from the sole source vendor on signed letterhead. This should be from representative and/or agent. Letter to include:
__Y__ Firm Price Quote
__Y__ Verify that they are the only known supplier of the product/service/repair
__Y__ Verify that they do not sell through distributors

Purchasing Department/Purchasing Officer
__Y__ Does the procurement satisfy requirements or R.S. 39:1957 (Sole Source Procurement)
__Y__ Determine if all above information have been provided
__Y__ May negotiate price. Was discount given?
__N__ Was item checked on internet? May verify other distributors, if needed. (Y) or (N)
(Company has exclusive rights and patent)

Approved: Linda Antoine 1/27/25
Purchasing Department

Title: Director of Purchasing

SSChecklistForm

§1597. Sole source procurements

A contract may be awarded for a required supply, service, or major repair without competition when, under regulations, the chief procurement officer or his designee above the level of procurement officer determines in writing that there is only one source for the required supply, service, or major repair item.

Added by Acts 1979, No. 715, §1, eff. July 1, 1980; Acts 2014, No. 864, §2, eff. Jan. 1, 2015.

If you experience any technical difficulties navigating this website, click here to contact the webmaster.
P.O. Box 94062 (900 North Third Street) Baton Rouge, Louisiana 70804-9062

United States of America

To Promote the Progress of Science and Useful Ar

The Director

of the United States Patent and Trademark Office has received an application for a patent for a new and useful invention. The titl and description of the invention are enclosed. The requirements of law have been complied with, and it has been determined that a patent on the invention shall be granted under the law.

Therefore, this United States

Patent

grants to the person(s) having title to this patent the right to exclude others from makin using, offering for sale, or selling the invention throughout the United States of America c importing the invention into the United States of America, and if the invention is a proce of the right to exclude others from using, offering for sale or selling throughout the Unite States of America, products made by that process, for the term set forth in 35 U.S.C. 154(a)(: or (c)(1), subject to the payment of maintenance fees as provided by 35 U.S.C. 41(b). See th Maintenance Fee Notice on the inside of the cover.

Katherine Kelly Vidal

DIRECTOR OF THE UNITED STATES PATENT AND TRADEMARK OFFICE

US011331849B2

(12) **United States Patent**
Hagedorn et al.

(10) **Patent No.: US 11,331,849 B2**
(45) **Date of Patent: May 17, 2022**

(54) **BOTTOM-UP POWDER CONVEYING MECHANISM FOR AN L-PBF SYSTEM, L-PBF SYSTEM AND METHOD FOR RETROFITTING AND OPERATING AN L-PBF SYSTEM**

(71) Applicant: **Aconity GmbH**, Herzogenrath (DE)

(72) Inventors: **Yves-Christian Hagedorn**, Aachen (DE); **Andreas Görres**, Aachen (DE)

(73) Assignee: **Aconity GmbH**, Herzogenrath (DE)

(*) Notice: Subject to any disclaimer, the term of this patent is extended or adjusted under 35 U.S.C. 154(b) by 187 days.

(21) Appl. No.: **15/737,885**

(22) PCT Filed: **Jun. 16, 2016**

(86) PCT No.: **PCT/EP2016/063950**
§ 371 (c)(1),
(2) Date: **Dec. 19, 2017**

(87) PCT Pub. No.: **WO2016/202953**
PCT Pub. Date: **Dec. 22, 2016**

(65) **Prior Publication Data**

US 2018/0297283 A1 Oct. 18, 2018

(30) **Foreign Application Priority Data**

Jun. 19, 2015 (DE) 102015109849.0

(51) **Int. Cl.**
B29C 31/02 (2006.01)
B29C 64/153 (2017.01)
(Continued)

(52) **U.S. Cl.**
CPC ***B29C 64/153*** (2017.08); ***B29C 64/205*** (2017.08); ***B29C 64/245*** (2017.08);
(Continued)

(58) **Field of Classification Search**
CPC B29C 64/20; B29C 64/153; B29C 64/321; B29C 64/343; B29C 67/00; B29C 31/02;
(Continued)

(56) **References Cited**

U.S. PATENT DOCUMENTS

4,418,845 A * 12/1983 Hehl B29C 45/18 222/162
4,818,562 A * 4/1989 Arcella C23C 26/02 427/597
(Continued)

FOREIGN PATENT DOCUMENTS

DE 19649865 C1 2/1998
DE 19952998 A1 5/2001
(Continued)

OTHER PUBLICATIONS

Preliminary Report on Patentability of the International Searching Authority in English from corresponding Patent Cooperation Treaty (PCT) Application No. PCT/EP2016/063950, completed Dec. 19, 2017.
(Continued)

Primary Examiner — Andrew D Stelair
(74) *Attorney, Agent, or Firm* — Gardner, Linn, Burkhart & Ondersma LLP

(57) **ABSTRACT**

A bottom-up powder conveying mechanism for a powder bed-based laser melting (PBLM) system includes a powder reservoir having a movable floor operable as a piston to convey powder towards an upper opening in the powder reservoir opposite the floor and through the upper opening to a working plane of the PBLM system. The bottom-up powder conveying mechanism further includes an external reservoir connected, via a sloping conduit, to the powder reservoir for conducting powder to the powder reservoir. The powder reservoir includes a side wall with a lower opening that is lower than the upper opening in the powder
(Continued)

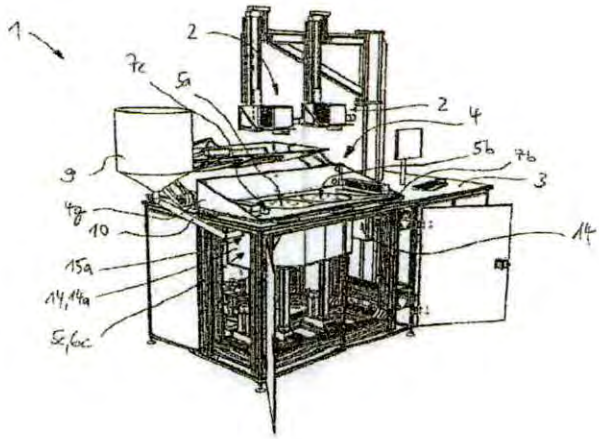

reservoir and through which the powder reservoir can be filled with the powder. The lower opening is connected in a gas-tight and releasable manner to the sloping conduit in order to be able to conduct the powder in a gravity-driven manner from the external reservoir into the powder reservoir.

9 Claims, 7 Drawing Sheets

(51) **Int. Cl.**

B33Y 40/00	(2020.01)
B29C 64/205	(2017.01)
B29C 64/245	(2017.01)
B29C 64/255	(2017.01)
B33Y 30/00	(2015.01)
B29C 64/343	(2017.01)

(52) **U.S. Cl.**
CPC ***B29C 64/255*** (2017.08); ***B29C 64/343*** (2017.08); ***B33Y 30/00*** (2014.12); ***B33Y 40/00*** (2014.12)

(58) **Field of Classification Search**
CPC B29C 31/04; B33Y 30/00; B33Y 40/00; B65G 47/44
See application file for complete search history.

(56) **References Cited**

U.S. PATENT DOCUMENTS

5,252,264	A	10/1993	Forderhase et al.	
6,764,636	B1	7/2004	Allanic et al.	
7,625,413	B1	12/2009	Reed, Jr.	
7,931,462	B2	4/2011	Mattes	
D835,162	S	12/2018	Reches et al.	
2002/0060137	A1	5/2002	Byeong-Ho	
2004/0084814	A1*	5/2004	Boyd	B29C 64/153 264/497
2005/0263932	A1*	12/2005	Heugel	B29C 64/153 264/113
2006/0076700	A1	4/2006	Phillips	
2007/0074659	A1	4/2007	Wahlstrom	
2008/0203621	A1	8/2008	Mattes	
2009/0020901	A1*	1/2009	Schillen	B29C 64/153 264/31
2012/0164322	A1	6/2012	Teulet	
2012/0284991	A1*	11/2012	Kusz	C12M 23/14 29/428
2012/0323345	A1	12/2012	Jonas et al.	
2013/0108726	A1*	5/2013	Uckelmann	B33Y 30/00 425/174.4
2013/0177766	A1	7/2013	Grebe et al.	
2014/0084517	A1	3/2014	Sperry et al.	
2014/0329953	A1*	11/2014	Paternoster	C08L 77/02 524/441
2015/0139849	A1*	5/2015	Pialot, Jr.	B22F 3/1055 419/55
2016/0185040	A1*	6/2016	Costlow	B29C 64/245 264/40.5
2018/0194126	A1	7/2018	Hagedorn et al.	
2018/0297275	A1	10/2018	Hagedorn et al.	

FOREIGN PATENT DOCUMENTS

DE	10342883	A1	5/2005	
DE	112004000301	T5	1/2006	
DE	102004041633	A1	3/2006	
DE	202009010489	U1	10/2009	
DE	102009029765	A1	12/2010	
DE	202009016400	U1	4/2011	
DE	202011003443	U1	12/2011	
DE	202012007238	U1	8/2012	
EP	1316408	A1	6/2003	
EP	2186625	A2 *	5/2010	G06T 1/00
EP	2399695	A1	12/2011	
EP	2732889	A2	5/2014	
GB	2315699	A	11/1998	
WO	2019031979	A1	2/2019	

OTHER PUBLICATIONS

International Search Report and Written Opinion of the International Searching Authority from corresponding Patent Cooperation Treaty (PCT) Application No. PCT/EP2016/063950, indicated completed on Dec. 5, 2016.

* cited by examiner

LaPAC

Welcome to the Louisiana Procurement and Contract Network

Help

LaPAC Public Menu | Vendor Registration Menu | Vendor Reg Procedures | UNSPSC Product Search

LaGOV Vendor Search Results

Search Again

LaPAC Help!

Previous Next

Page 1 of 1

Total of 1 Record Found

Company Name	Address	Parish	Contact Info	SEBD	SmallE	VSE	DVSE	Vendor
ACONITYUS, INC.	501 GEORGE PERRY BLVD. SUITE E ROOM 106 EL PASO, TX 79925	EL PASO	Contact: TERRAZAS, CESAR Phone: 915-234-2643 ext: Fax: Email: TERRAZAS@ACONITYUS.COM	N	N	N	N	310309372

LaPAC
Welcome to the Louisiana Procurement and Contract Network

Help

LaGov Vendor Details

Return to Result List

LaPAC Help!

IMPORTANT NOTE: If Contact Information is Unavailable, Vendor has not completed the LaGov Vendor Registration process. The complete registration process is provided in the Vendor Registration Procedures section of this website.

ACONITYUS, INC.

Detail Information

Added on 02/03/2025

Last Updated 02/03/2025

Contact: CESAR TERRAZAS
Address: 501 GEORGE PERRY BLVD. SUITE E ROOM 106
EL PASO, TX 79925
EL PASO
Phone: 915-234-2643 ext:
Toll Free #:
Fax:
Email Address: TERRAZAS@ACONITYUS.COM

Registered Commodities

23151500 RUBBER AND PLASTIC PROCESSING MACHINERY, EQUIP. AND SUPPLIES
23151600 CEMENT, CERAMICS, GLASS INDUSTRY MACHINERY, EQUIP., SUPPLIES
23151700 OPTICAL INDUSTRY MACHINERY AND EQUIPMENT AND SUPPLIES
23151800 PHARMACEUTICAL INDUSTRY MACHINERY AND EQUIPMENT AND SUPPLIES
23151900 PAPER MAKING AND PAPER PROCESSING MACHINERY, EQUIP. AND SUP.
23152000 WEB HANDLING AND CONTROL MACHINERY, EQUIPMENT AND SUPPLIES
23152100 SEPARATION MACHINERY AND EQUIPMENT
23152200 MANUFACTURING TABLES AND STANDS
23152900 PACKAGING MACHINERY
23153000 HOLDING AND POSITIONING AND GUIDING SYSTEMS AND DEVICES
23153100 INDUSTRIAL MACHINERY COMPONENTS AND ACCESSORIES
23153200 ROBOTICS
23153400 ASSEMBLY MACHINES
23153500 PAINT SYSTEMS
23153600 PART MARKING MACHINES
23153700 PRECISION FASTENING OR TORQUE EQUIPMENT
81141500 QUALITY CONTROL
81141600 SUPPLY CHAIN MANAGEMENT
81141700 PRODUCTION PLANNING AND CONTROL
81141800 FACILITIES MANAGEMENT

Form **W-9**
(Rev. October 2018)
Department of the Treasury
Internal Revenue Service

Request for Taxpayer Identification Number and Certification

▶ Go to *www.irs.gov/FormW9* for instructions and the latest information.

Give Form to the requester. Do not send to the IRS.

Print or type. See Specific Instructions on page 3.

1 Name (as shown on your income tax return). Name is required on this line; do not leave this line blank.
AconityUS, Inc.

2 Business name/disregarded entity name, if different from above

3 Check appropriate box for federal tax classification of the person whose name is entered on line 1. Check only **one** of the following seven boxes.

☐ Individual/sole proprietor or single-member LLC ☑ C Corporation ☐ S Corporation ☐ Partnership ☐ Trust/estate

☐ Limited liability company. Enter the tax classification (C=C corporation, S=S corporation, P=Partnership) ▶

Note: Check the appropriate box in the line above for the tax classification of the single-member owner. Do not check LLC if the LLC is classified as a single-member LLC that is disregarded from the owner unless the owner of the LLC is another LLC that is **not** disregarded from the owner for U.S. federal tax purposes. Otherwise, a single-member LLC that is disregarded from the owner should check the appropriate box for the tax classification of its owner.

☐ Other (see instructions) ▶

4 Exemptions (codes apply only to certain entities, not individuals; see instructions on page 3):

Exempt payee code (if any)

Exemption from FATCA reporting code (if any)

(Applies to accounts maintained outside the U.S.)

5 Address (number, street, and apt. or suite no.) See instructions.
501 George Perry Blvd. Suite E

Requester's name and address (optional)

6 City, state, and ZIP code
El Paso, TX, 79925

7 List account number(s) here (optional)

Part I Taxpayer Identification Number (TIN)

Enter your TIN in the appropriate box. The TIN provided must match the name given on line 1 to avoid backup withholding. For individuals, this is generally your social security number (SSN). However, for a resident alien, sole proprietor, or disregarded entity, see the instructions for Part I, later. For other entities, it is your employer identification number (EIN). If you do not have a number, see *How to get a TIN*, later.

Note: If the account is in more than one name, see the instructions for line 1. Also see *What Name and Number To Give the Requester* for guidelines on whose number to enter.

Social security number
☐☐☐ – ☐☐ – ☐☐☐☐

or

Employer identification number
8 3 – 1 4 7 4 7 6 4

Part II Certification

Under penalties of perjury, I certify that:

1. The number shown on this form is my correct taxpayer identification number (or I am waiting for a number to be issued to me); and
2. I am not subject to backup withholding because: (a) I am exempt from backup withholding, or (b) I have not been notified by the Internal Revenue Service (IRS) that I am subject to backup withholding as a result of a failure to report all interest or dividends, or (c) the IRS has notified me that I am no longer subject to backup withholding; and
3. I am a U.S. citizen or other U.S. person (defined below); and
4. The FATCA code(s) entered on this form (if any) indicating that I am exempt from FATCA reporting is correct.

Certification instructions. You must cross out item 2 above if you have been notified by the IRS that you are currently subject to backup withholding because you have failed to report all interest and dividends on your tax return. For real estate transactions, item 2 does not apply. For mortgage interest paid, acquisition or abandonment of secured property, cancellation of debt, contributions to an individual retirement arrangement (IRA), and generally, payments other than interest and dividends, you are not required to sign the certification, but you must provide your correct TIN. See the instructions for Part II, later.

Sign Here **Signature of U.S. person ▶** **Date ▶** *07/06/2023*

General Instructions

Section references are to the Internal Revenue Code unless otherwise noted.

Future developments. For the latest information about developments related to Form W-9 and its instructions, such as legislation enacted after they were published, go to *www.irs.gov/FormW9*.

Purpose of Form

An individual or entity (Form W-9 requester) who is required to file an information return with the IRS must obtain your correct taxpayer identification number (TIN) which may be your social security number (SSN), individual taxpayer identification number (ITIN), adoption taxpayer identification number (ATIN), or employer identification number (EIN), to report on an information return the amount paid to you, or other amount reportable on an information return. Examples of information returns include, but are not limited to, the following.

- Form 1099-INT (interest earned or paid)
- Form 1099-DIV (dividends, including those from stocks or mutual funds)
- Form 1099-MISC (various types of income, prizes, awards, or gross proceeds)
- Form 1099-B (stock or mutual fund sales and certain other transactions by brokers)
- Form 1099-S (proceeds from real estate transactions)
- Form 1099-K (merchant card and third party network transactions)
- Form 1098 (home mortgage interest), 1098-E (student loan interest), 1098-T (tuition)
- Form 1099-C (canceled debt)
- Form 1099-A (acquisition or abandonment of secured property)

Use Form W-9 only if you are a U.S. person (including a resident alien), to provide your correct TIN.

If you do not return Form W-9 to the requester with a TIN, you might be subject to backup withholding. See What is backup withholding, *later.*

Budget Availability Status FGIBAVL 9.3.30 (SUSPROD)

Chart: C **Fiscal Year:** 25 **Index:** **Commit Type:** Both **Fund:** 222959 MRI Track I: Acquisition of an Adva **Organization:** 22685 Mechanical Engineering

Start Over

Account: 61000 Bud Pool Salaries and Wages **Program:** 22000 Research Baton Rouge **Keys --->** **Control Fund:** 222959 **Control Organization:** 22685 **Control Account:** 61000 **Control Program:** **Pending Documents:**

BUDGET AVAILABILITY STATUS

Insert Delete Copy Filter

Account	Title	Adjusted Budget	YTD Activity	Commitments	Available Balance	Pending Documents
61000	Bud Pool Salaries and Wages	49,250.00	0.00	0.00	49,250.00	
62000	Budget Pool Benefits	4,605.00	0.00	0.00	4,605.00	
72000	Budget Pool Oper Services	114,037.00	0.00	0.00	114,037.00	
76300	Plant Acquis $5K Above	930,754.00	0.00	0.00	930,754.00	
77000	Budget Pool Overhead Recovery Expen	74,344.00	0.00	0.00	74,344.00	
	Total	1,172,990.00	0.00	0.00	1,172,990.00	

1 of 1 10 Per Page Record 1 of 5

Budget for 3D Printer

SAVE

Mission Statement

Through shared governance, leadership, and a diverse system of unique institutions, the mission of the Southern University and A&M College System is to deliver affordable world-class education, a trained workforce, state-of-the-art research, creative scholarship, and transformational public service to the State of Louisiana, the Nation, and the World.

PERSONNEL AFFAIRS COMMITTEE
(Following Legal Affairs Committee)
February 21, 2025

AGENDA

1. Call to Order

2. Roll Call

3. Adoption of the Agenda

4. Public Comment

5. Action Item(s)

A. Request for Approval of Personnel Action on Positions Equal to or Greater than $100,000.00 (SUAREC)

Name	Position/Department	Personnel Action	Waived/ Search	Salary		Funding Source
				Previous	Suggested	
1. Dr. Clyde Bagley	Vice Chancellor of Research	Promotion/Full Professor with Tenure	Search	184,760	$175,000	Federal

B. Request Approval of Personnel Action on Positions Equal to or Greater than $100,000.00 (SUS)

Name	Position/Department	Personnel Action	Waived/ Search	Salary		Funding Source
				Previous	Suggested	
2. Dawn Harris	Chief Human Resources Officer	Promotion	Search	$130,000	$135,000	State

6. Other Business

7. Adjournment

Members

Atty. Edwin Shorty– Chair Ms. Maple Gaines – Vice Chair, Mr. Reggie Abraham, Ms. Zazell V. Dudley, Mr. Chris Masengill, Atty. Domoine Rutledge, Mrs. Ann Smith, Mr. Henry Whitehorn, and Atty Tony Clayton – Ex Officio

SOUTHERN UNIVERSITY
AGRICULTURAL
RESEARCH & EXTENSION
CENTER

"Linking Citizens of Louisiana with Opportunities for Success"

Southern University and A & M College System
AGRICULTURAL RESEARCH AND EXTENSION CENTER
and the COLLEGE OF AGRICULTURAL, HUMAN AND ENVIRONMENTAL SCIENCES
Ashford O. Williams Hall
P. O. Box 10010
Baton Rouge, LA 70813
(225) 771-2242
(225) 771-2861 Fax
www.suagcenter.com

OFFICE OF THE CHANCELLOR-DEAN

February 4, 2025

Dennis J. Shields, SUS President
Southern University and A&M College System
J.S. Clark Administration Building, 4th Floor
Baton Rouge, LA 70813

Re: Selection of a Vice Chancellor for Research, Full Professor with Tenure for the Southern University Agricultural Research and Extension Center – Dr. Clyde Bagley

Dear President Shields:

I seek your support and approval to select Dr. Clyde Bagley as the Vice Chancellor for Research, Full Professor with Tenure at the Southern University Agricultural Research and Extension Center.

Dr. Bagley brings over 40 years of experience in agriculture research and academia. He has the knowledge and expertise necessary to advance our mission. His extensive track record demonstrates his ability to develop and lead impactful research programs and initiatives. Dr. Bagley's ability and understanding of research make him an ideal candidate for this critical role. After a comprehensive search, Dr. Bagley has been selected as the preferred candidate.

Therefore, I am recommending the appointment of Dr. Clyde Bagley as the Vice Chancellor for Research, Full Professor with Tenure, at an annual salary of $175,000, effective March 1, 2025. I respectfully seek your consideration of this appointment during the next scheduled Board of Supervisors Meeting.

Please feel free to reach out if you have any questions or require further clarification. Thank you for your time and consideration.

Sincerely,

Orlando F. McMeans, PhD
Chancellor-Dean

Approval: _____
Dennis J. Shields Date
SUS President

The Southern University Agricultural Research and Extension Center is a statewide campus of the Southern University System and provides equal opportunities in programs and employment. Southern University and A & M College, Louisiana parish governing bodies, Louisiana State University, and Unites States Department of Agriculture cooperating.

SOUTHERN UNIVERSITY - BATON ROUGE, LA 70813

SUS ☐ SUBR ☐ SULAC ☐ SUAREC ☒ SUNO ☐ SUSLA ☐

****

POSITION VACANCY AUTHORIZATION

****

REQUEST THAT THE POSITION TITLE Vice Chancellor for Research AS DESCRIBED BELOW
BE AUTHORIZED AS A VACANCY FOR SUAREC
(Department or Unit)

☒ Replacement ☐ New Position ☐ Unclassified
☐ Civil Service ☐ Temporary ☐ Faculty
☐ Tenured ☐ Probationary (For Faculty this is the same as tenure track)

Source of Funds
☐ State
☐ Grant -in-Aid
☐ System Revenue
☐ Agency Fund State

VACANCY DESCRIPTION AND JUSTIFICATION

(Include rank (for faculty) and approximate salary; initiator of the form must have prior approval of salary/salary range with the appropriate Vice-Chancellor, Chancellor, and/or President. Salaries for classified positions must be approved through Human Resources).

The Vice Chancellor for Research is a full-time, 12-month position, and reports directly to the Chancellor-Dean. The Vice Chancellor for Research will provide dynamic leadership for articulating and implementing a shared vision for research and will be a leader in addressing the state, regional, and national issues of compelling interest to the research community. Provide guidance and leadership to faculty through collaborations, the development of professional enhancement programs, and assistance in seeking and obtaining extramural funding. The Vice Chancellor for Research is responsible for the administrative oversight of the operations and Maintenance of research facilities and experimental equipment associated with the research sites.

Salary/Range: $150,000 to $190,000 Previous Incumbent (if replacement): Jose Toledo

X Approved ___ Disapproved [signature] 07/25/24
Department Head Date

X Approved ___ Disapproved [signature] 07/25/24
Dean/Director/Supervisor of Budget Unit Date

FINANCE/BUDGET OFFICE ONLY Funds Available	
X Yes	___ No
B Gamble-Allard	7.26.2024
Signature	Date
Budget Number	621681-65050-61002-62000

HUMAN RESOURCES OFFICE ONLY Existing/Approved Position			
✓ Yes		___ No	
Employee Class:	MU	Job Class:	65092
Mikhale Williams			07/29/24
Verified By:			Date:

___ Approved ___ Disapproved _____ _____
Vice Chancellor Date

X Approved ___ Disapproved [signature] 07/25/24
Chancellor/Vice President Date

✓ Approved ___ Disapproved [signature] 7/25/24
President Date

An Equal Opportunity Employer

Rev. 8/05/2013

Vice Chancellor for Research

Southern University Agricultural Research & Extension Center

Job Description Summary

The Vice Chancellor for Research is responsible for assisting the Southern University Agricultural Research & Extension Center (SUAREC or SU Ag Center) Chancellor-Dean in promoting and expanding the research mission of SUAREC and the College of Agricultural, Human and Environmental Sciences (CAHES) by increasing and supporting the scholarly activities of faculty and students, developing strategic partnerships with other institutions of higher education, government, and industry while promoting shared responsibility, compliance, and research integrity. Specifically, the Vice Chancellor for Research will assist faculty members in their research endeavors, encourage interdisciplinary activities across the campus, and provide support in the development of new programs and initiatives. In addition, the Vice Chancellor for Research will work with Southern University System (SUS) officials, state officials, and federal officials to ensure that the research being conducted is done so in a compliant and responsible manner.

Also, the Vice Chancellor for Research is responsible for research administration, operations, and supervision of the SUAREC Research Station and accompanying farms, along with its staff, research activities, and projects. The Vice Chancellor for Research is also responsible for the administrative oversight of the operations and maintenance of research facilities and experimental equipment associated with the research sites. The successful candidate will assist researchers in securing funds for applied and basic research activities, develop and enhance partnerships, as well as collaborate with other institutions, industries, and state and federal agencies (e.g., United States Department of Agriculture [USDA], the Louisiana Department of Agriculture and Forestry, and the Louisiana State University (LSU) Agricultural Center.

The Vice Chancellor for Research is a full-time, 12-month position, and reports directly to the Chancellor-Dean.

Specific Duties: The Vice Chancellor for Research will provide dynamic leadership for articulating and implementing a shared vision for research and will be a leader in addressing the state, regional, and national issues of compelling interest to the research community. More specifically, these responsibilities include but are not limited to:

- Promote and expand the research mission of the SUAREC by increasing and supporting the scholarly activities of faculty, students, and partners/collaborators.
- Provide leadership for strategic planning and prioritizing of research needs.
- Provide guidance and leadership to faculty through collaborations, the development of professional enhancement programs, and assistance in seeking and obtaining extramural funding.

- Provide the day-to-day leadership of the SUAREC Experiment Research Station and other research sites.
- Develop and maintain an electronic repository of research activities and projects of the faculty, staff, students, and collaborators.
- Coordinate the preparation of the five-year plans of work required by the USDA and the Evans-Allen Program, as required for SUAREC.
- Prepare annual reports of progress on research projects.
- Communicate funding opportunities and deadlines to faculty in an effective manner.
- Provide data and reports related to research programs and efforts to various internal and external groups and constituents.
- Provide leadership to ensure up-to-date information is available to stakeholders, faculty, and others through a variety of communications, such as the research page on SUAREC's website and publications.
- Ensure that Responsible Conduct for Research Compliance (RCRC), Civil Rights Compliance, and other compliance mandates are met by the University by providing oversight and making recommendations as needed.
- Maintain a viable and accountable Institutional Animal Care and Use Committee (IACUC).
- Maintain a strong accountability leadership oversight in livestock record keeping.
- Actively engage with and develop relationships with funding agencies, program managers, industries, commodity groups, and other stakeholders.
- Perform related duties as assigned.

Minimum Qualifications: Must have an earned Ph.D. in an agricultural field from an accredited institution such as agricultural business, agricultural economics, animal sciences, plant and soil sciences, food sciences, or human sciences is preferred. A minimum of 10 years of experience as an administrator is required with at least five (5) years experience leading a research unit. The successful candidate will have strong written and oral communication skills and experience working with diverse clientele and organizations. The successful candidate must have a strong track record of interacting with farm groups and the ability to transverse the State of Louisiana interacting with farm stakeholders and groups regularly.

A strong record of achievement in the areas of publications, especially referred publications, strong research project management, possesses a strong record of obtaining extramural funding as a principal investigator, demonstrated administrative skills and/or experiences, demonstrated leadership, sound judgment, and the ability to interpret and administer policies, excellent interpersonal communication and effective organizational skills, and the ability to meet eligibility requirements to work in the United States at the time the appointment is scheduled to begin and continue working legally for the proposed time of the job is required.

Demonstrable experiences in interacting with faculty, staff, students, and external constituents. Ability to work with a culturally, racially, and gender-diverse work team. Must possess excellent written and verbal communications skills and the ability to

communicate technical concepts, ideas to individuals, and groups. Familiarity with internet and web-based applications is desirable.

Supervisory Responsibilities: The individual selected will supervise the areas of the Research Station, land-grant research labs, and research buildings of the SUAREC.

Other Qualifications: Must be able to attend meetings and other work-related events and activities, travel to attend state, regional, and national conferences or workshops as appropriate.

Physical Demands: The physical demands described here are representative of those that must be met by an employee to successfully perform the essential functions of this job. Reasonable accommodations may be made to enable individuals with disabilities to perform the essential functions.

While performing the duties of this job, the employee is regularly required to sit and reach with hands and arms. The employee is frequently required to stand and walk. Specific vision abilities required by this job include the ability to adjust focus.

Salary Range: $150,000 to $190,000

Application Deadline: December 2024 or open until filled.

Work Environment: The work environment characteristics described here are representative of those an employee encounters while performing the essential functions of this job. Reasonable accommodations may be made to enable individuals with disabilities to perform the essential functions. The noise level in the work environment is usually moderate.

How to Apply: Send a letter of application, curriculum vita, and three (3) references, and completed Southern University Employment Application to:

Dr. C. Reuben Walker
Southern University Agricultural Research and Extension Center
P.O. Box 10010
Baton Rouge, LA 70813
Email: calvin_walker@suagcenter.com

The Southern University Agricultural Research and Extension Center is an equal opportunity/affirmative action employer.

SU Ag Center Research Personnel

1.Name: Clyde Pattison Bagley

2. Email address(es)
   Clyde.bagley@sus.edu
   Clyde.bagley@subr.edu
   Clyde_bagley@suagcenter.com

3. [redacted]

4.

5.

6. Degree(s)
   B.S. Louisiana State University
   M.S. Louisiana State University
   Ph.D. Virginia Tech University

7 Resume: Attached below

8. Research interest(s)
   a) beef cattle nutrition
   b) calf programming
   c). Carbon Sequestration/ Carbon Storage
   d) forage-animal management systems
   e) "cattle tracking" technology
   f) forage vs. grain-fed beef
   g) systems for evaluating forage quality
   h) improved forage quality
   i) brown mid rib gene expression for improving forage quality
   j) management of "Riata" bahia grass
   k) smutgrass/ veazygrass weed control in pastures
   l). Bagasse treatments

9. Current research project inventory:
   1. On-Farm Research related to rotational grazing and soil health (NRCS, LSU)
   a. Summary: This is an NRCS 3-year funded project and we are moving into the 3rd year of data collection. Multiple focus areas including a) describing rotational grazing systems at 3 locations; b) evaluating forage quality and yield under rotational grazing systems; c) conducting "soil health" evaluations; hosting annual "Pasture Walks" at each location.
   b. Goals and Objectives: describe and quantify forage quality, forage yield, soil heath characteristics under rotational grazing systems at three 3-privately owned farms in southern Louisiana.
   c. Methodology: Monthly, starting in April thru October, farm visits are made and estimates of dry matter yield, forage quality, forage cover, and botanical composition estimates are made at each of the 3 locations.
   d. Timeline: Data collection is to be completed in October 2024.

e. Expected outcomes and results. We have already published one refereed article, and 6 posters

f. Final report (30 days after the summer period ends – End of August): I have a progress report due to USDA/ NRCS due April 30, and again September 30.

2. Cow-Calf research focused on "Calf Programming> (LSU)

a. Summary: Study to evaluate cow nutrition pre- and post-calving and it impacts of heifer and steer (SUN Beef) long-term performance

b. Goals and Objectives: Measure differences in calf performance due to maternal nutrition, and determine its long-term effects of heifer performance once they calf, and steer performance taking to finishing phase.

c. Methodology: Cows are fed moderate or high nutrition pre-calving, and moderate and high nutrition post-calving for 75 days with cow reproductive measured, and calf performance measured. Calves are then creep-fed or not. At weaning, all steers and heifers are managed the same to get to heifers weaning their first calves, and steers are evaluated for carcass characteristics post-finishing.

d. Timeline: two more years of data collection.

e. Expected outcomes and results. Early results find improved gains (P>.05) but improved gains (P<.05) for creep feeding, with these performance differences remaining thru carcass evaluation. Heifers are calving currently.

f. Final report (30 days after the summer period ends – End of August): Three invited presentations and 5 posters/

3. Phosphorus supplements for grazing beef heifers (Grant funded) (LSU, Marshall Mineral Company)

a. Summary: P is a very expensive mineral supplement ($2,500/ton vs. Ca at $120/ ton) that some (including me) is over-used. Mineral supplement costs can be drastically reduced by avoiding P in mineral supplements. Corn co-products (dried distiller's grains with solubles/ DDGS and corn gluten pellets) are excellent feed supplements which are both high in available P.

b. Goals and Objectives: Replacement beef heifers were fed mineral supplements with or without P when using DDGS as a protein supplement. Evaluate gains, blood P levels, and fecal P levels between the treatments.

c. Methodology: With grazing heifers, 3 groups: 1) Complete mineral premix (CMP) No P, with DDGS supplement; CMP + P + DDGS, and CMP + P + DDGS + Enzyme. Cattle weighed every 28 days, with blood and fecal samples taken. Pastures were sampled every 28 days.

d. Timeline: Study completed.

e. Expected outcomes and results. Heifer P blood levels were similar between all treatments and in the "acceptable range" indicating when feeding DDGS, no P is necessary.

f. Final report (30 days after the summer period ends – End of August) Report in Robert Palfreyman thesis.

g. Cooperating with LSU scientists, we plan to apply for a CBG and further evaluate P supplements for beef cattle/

4. Utilizing sugar cane bagasse in a useful way (IFUS, American Sugar Cane League, Proton Power, LSU)

a. Summary: Developing strategies with LSU, Kentwood Co Op, and American Sugar Cane League to use bagasse.

b. Goals and Objectives: Louisiana generates about 5 million tons of bagasse waste every year, and that amount is increasing with increasing acreage. Attempts will be made to make it a useful feed, a pyrolysis substrate, filter, concrete component, and potting soil.

c. Methodology: Teams will be put together to address these and other uses of bagasse.
d. Timeline: Develop teams, set protocols, and begin efforts in mid-summer.
e. Expected outcomes and results. Multiple efforts to address the increasing mountains of waste bagasse in the State.
f. Final report (30 days after the summer period ends – End of August): Progress report in late summer
5. Broiler litter efforts as feed or fertilizer: (Louisiana Farm Bureau, Louisiana Department of Agriculture and Forestry)
a. Summary: Develop protocols for the safe use of broiler litter as a fertilizer or a cow feed.
b. Goals and Objectives: Demonstrate the safe use of broiler litter and when and where it can replace hay in beef cow diets.
c. Methodology: Use broiler litter from several sources and develop it either as a feed or fertilizer based on quality characteristics, primarily mineral content.
d. Timeline: Currently looking for farms to donate small amounts of untreated litter.
e. Expected outcomes and results. Expect to prove that broiler litter can be an effective hay substitute in situations of limited hay availability.
f. Final report (30 days after the summer period ends – End of August) Late summer
6. On-Station small forage plots: (LSU)
a. Summary: Evaluate both cool- and warm-season forages for potential farm use.
b. Goals and Objectives: Identify superior forages to be planted in pastures for forage and/or hay production.
c. Methodology. In replicated small plots (5 ft x 20 ft) plant 18 – 20 different forage types and evaluated for agronomic characteristics.
d. Timeline: Plots are tilled and will plant mid-May.
e. Expected outcomes and results. Identify superior forages for livestock.
f. Final report (30 days after the summer period ends – End of August) October.
7. On-Farm Small plots: (LSU)
a. Summary: Plant 20 – 25 new forages in on-farm cooperator plots. Plots will be grazed by either sheep or goats to determine their acceptance as forage crops for livestock.
b. Goals and Objectives: Plant two reps of 20 – 25 forages. Evaluate under grazing to determine which forages are most acceptable by sheep and cattle under grazing conditions.
c. Methodology: Small plots 5 x 20 feet will be replicated and planted to forages. Cattle or sheep will graze the forages they prefer and favorites determined by visual observations.
d. Timeline: Grazing in June and again in mid-July.
e. Expected outcomes and results. Unknown – hopefully we will identify forages preferred by both sheep and cattle.
f. Final report (30 days after the summer period ends – End of August)- October --- the great hope I have is to find a "summer-time forage for creep-grazing by Spring-born calves that improves weaning weight. Earlier studies with fall-born calves showed weaning weights could be increased 77 lb for about $0.20 per lb of gain by supplying ryegrass-clover in mid-winter. We desire to identify a similar summer creep grazing forage that would produce similar results.
8. Technology on the farm: This will be rather lengthy since there are lots of parts to this one. (CORE LOCK, smaXtec)

a. Summary: "Cattle- Tracking." The ultimate goal is far-reaching – we want to know where cattle are at all times; are they eating/ resting/ ruminating; how much water are they drinking; are they in estrus; are they calving; are they being chased; are they running fever/ sick; how much do they weigh; when and how much supplemental minerals are they consuming; providing supplements of known quantities in known amounts specifically to each animal on a test and feed different levels if so desired; apply insecticide and / or dewormers as scheduled; and control where cattle are allowed to graze.

b. Goals and Objectives: Know where cattle are at all times; are they healthy; are they being disturbed; what is the rumen pH/ methane gas generations; how fast and where are they moving; how much and when do they drink water; how much and when do they consume minerals; controlling where they graze in a pasture using a.i.

c. Methodology: Much of this technology is in-place or being assembled currently. Seriously lacking are two feed allocation pieces—1) a 4 compartment feeder that thru RFID identifies a cow, and allocates a certain among of supplement to that individual animal making that individual animal an "experimental unit." Another piece needed is a mineral feeder, also using RFID technology where an animal is identified; the amount of mineral consumed measured, and there is a "sprayer" attached and every 18 – 21 days an insecticide is sprayed on individuals to control hornflies. Similarly, dispensers can be replaced, and animals are dewormed twice per year while consuming minerals.

d. Timeline: Construction and delivered of the two feed dispensers require about 2 months from order to delivery – we need an approved P O to move forward on both.

e. Expected outcomes and results. This is the future technology that will form the basis of the modern cattle industry. When paired with drones, when there is any unusual activity, a drone can be sent out to visually investigate.

f. Final report (30 days after the summer period ends – End of August) – research is on-going for many years.

9. Impacts of deworming on internal parasite resistance: (LSU Vet School)

a. Summary: a two-part study where we a) evaluated the potential of parasite resistance to Ivermectin in yearling beef heifers and steers, and b) evaluate the effectiveness of long-acting dewormers on calf gains and performance under two nutritional treatments.

b. Goals and Objectives: a) determine if there is a developing internal parasite resistance to Ivermectin, and b) to measure impacts of regular vs. long-acting dewormers in sucking calves under two nutritional management systems.

c. Methodology: a) deworm yearlings using three deworming regimes at 2-week intervals, collecting and evaluating fecal egg counts to determine the effectiveness of different dewormers and if we are detecting parasite resistance to Ivermectin. b) compare "regular" and "long-acting" dewormers in calves on two nutritional management levels, either moderate or high nutrition. Fecal egg counts will be monitored along with individual animal gains.

d. Timeline: Part a) data has been collected and fecal egg counts currently being conducted and data prepared for tabular presentation by about June 15. Project b) will commence on or about June 1, with data collection going until about September 1, with data summarized and completed on or about October 1.

e. Expected outcomes and results. Unknown. We "expect" that we will see some parasite resistance to Ivermectin since it has been a primary deworming product in the cattle industry for almost 30 years. And in b) we hope to see that "long-acting" dewormers give greater internal parasite protection and thus improved animal performance as compared to the "short-term" effects of current deworming products.

f. Final report (30 days after the summer period ends – End of August) Data collection completed Sept 1, final report mid-October.

10. SUN Beef (Southern University Natural Beef) –

a. Summary: This effort is primarily the culmination of the cow-calf research effort (Project # 2 above) and is a mechanism for marketing beef produced from that study. It just happens to correspond with the current funding of numerous small beef processing plants due to industry consolidation. This move more towards an outreach/ extension effort, but has serious impacts on all aspects of beef cow-calf production and marketing.

b. Goals and Objectives: To successfully develop SUN Beef in the marketplace, and expand those marketing activities to small beef producers allowing them to direct-market their own farm-raised beef in commercial markets under the name of SUN Beef using protocols we develop and marketing under that umbrella. .

c. Methodology: Develop protocols for small farmers to produce and market SUN Beef.

d. Timeline: The horizon is about 3 years.

e. Expected outcomes and results. Develop simple protocols for area farmers to market "SUN Beef" using, at least initially, ARAMARK on campus for supplying beef on-campus and to extend beef offering by engaging area farmers in our "approved" production techniques and feedlot aspects.

f. Final report (30 days after the summer period ends – End of August) On-going

8. Equipment proficiency
   a) portable NIR forage quality analyzer
   b) feed mill management
   c) small farm equipment

10. Collaborations need
   a) meat scientist
   b) reproductive physiologist
   c) trained ultrasound sonographer
   d) soil scientist
   e) weed scientist

11. Awards and Honors
   a) AFGC Merit Certificate Award
   b) Chairman, International Committee on Terminology of Grazing Lands and Grazing Animals
   c) Harold Love Award, State of Tennessee for Outstanding Humanitarian Contributions
   d). "Vision Award" in Agriculture, Overton County, Tennessee
   e). President, American Forage and Grasslands Council
   f). President, Southern Pasture Forage Crop Improvement Conference
   g) Tennessee Tech Outstanding Researcher, College of Agriculture and Human Sciences

12. International countries' experience and interest
   a) Canada
   b) Mexico
   c) Belize
   d) Paraguay
   e) Uruguay
   f). Brazil

g) South Africa
h) New Zealand
i) Australia
j) Tahiti
k) Germany
l) Finland
m) England
n) Scotland
o) China
p) Hong Kong
q) Japan
r) Portugal
s) Spain
t) Italy
u) France
v) Monaco
w) Peru
x) Panama
y) Dominican Republic
z) Haiti
aa) Netherlands
bb) Belgium
cc) St. Kitts

SOUTHERN UNIVERSITY AND A&M COLLEGE SYSTEM
J.S. CLARK ADMINISTRATION BUILDING
4TH FLOOR
BATON ROUGE, LOUISIANA 70813

OFFICE OF THE PRESIDENT
(225) 771-4680

FAX NUMBER
(225) 771-5522

February 11, 2025

Southern University and A&M College
Board of Supervisors
J.S. Clark Administration Building, 4th Floor
Baton Rouge, LA 70813

Re: *Request Approval to Hire Dawn Harris as Chief Human Resources Officer*

Dear Chairman Clayton and Honorable Members of the Board:

This correspondence seeks your approval for the appointment of Dawn Harris, current Director of Human Resources for the Southern University and A&M College, to the Chief Human Resource Officer for the System. The proposed salary is $135,000 with a start date of February 24, 2025.

Director Harris was one of three finalists that the committee recommended and I interviewed. Her institutional knowledge, certifications, civil service and higher education experience, and temperament make her the ideal candidate. Using the results of the consultant's report Ms. Harris has identified focus areas of improving succession planning, compensation, recruitment, and utilization/upgrading technology. She has already started working on a compensation study for the System, including faculty, staff, and administration.

It is for the above-referenced reasons, I seek your favorable consideration of this request. Should you have any questions, please do not hesitate to contact me.

Kindest Regards,

Dennis Shields (Feb 12, 2025 20:46 CST)
Dennis J. Shields
President

SOUTHERN UNIVERSITY - BATON ROUGE, LA 70813

SUS ☒ SUBR ☐ SULAC ☐ SUAREC ☐ SUNO ☐ SUSLA ☐

****

POSITION VACANCY AUTHORIZATION

****

REQUEST THAT THE POSITION TITLE Chief Human Resources Officer AS DESCRIBED BELOW
BE AUTHORIZED AS A VACANCY FOR President's Office
(Department or Unit)

☐ Replacement ☒ New Position ☒ Unclassified
☐ Civil Service ☐ Temporary ☐ Faculty
☐ Tenured ☐ Probationary (For Faculty this is same as tenure track)

Source of Funds
☒ State
☐ Grant -in-Aid
☐ System Revenue
☐ Agency Fund State

VACANCY DESCRIPTION AND JUSTIFICATION

(Include rank (for faculty) and approximate salary; initiator of form must have prior approval of salary/salary range with the appropriate Vice-Chancellor, Chancellor and/or President. Salaries for classified positions must be approved through Human Resources).

As part of the President's Executive Cabinet, this System position is directly responsible for leading managers of the division and indirectly responsible for all employees within the division. The CHRO establishes and implements Human Resources (HR) efforts that effectively communicate and support the System's mission and strategic vision, by developing HR plans and strategies to support the achievement of the System's overall business operations objectives.

The ideal candidate will function as a strategic business advisor to the executive/senior management regarding key organizational and management issues. CHRO will work with the System's executive management team to establish a sound plan of management succession that corresponds to the strategy and objectives of the University. The CHRO develops comprehensive strategic recruiting, and retention plans to meet the human capital needs of strategic goals, as well as develop and implement comprehensive compensation and benefits plans that are competitive by overseeing talent acquisition, talent development, succession planning, retention, training, leadership development, compensation and benefits globally.

Salary/Range: $110,000 - $140,000 Previous Incumbent (if replacement): 130,000

✓ Approved ___ Disapproved [signature] 11/13/24
Department Head Date

___ Approved ___ Disapproved
Dean/Director/Supervisor of Budget Unit Date

FINANCE/BUDGET OFFICE ONLY
Funds Available
✓ Yes ___ No
1M8892
[signature] 11/14/24
Signature Date
Budget Number 111005-11401-61002-16000

HUMAN RESOURCES OFFICE ONLY
Existing/Approved Position
✓ Yes ___ No
Employee Class: MU Job Class: 12261
Michele Williams 11/14/24
Verified By: Date:

✓ Approved ___ Disapproved [signature] 11/15/24
Vice Chancellor Date

___ Approved ___ Disapproved
Chancellor/Vice President Date

✓ Approved ___ Disapproved [signature] 11/13/24
President Date

An Equal Opportunity Employer

Rev. 8/05/2013

Vacancy Announcement System (VAS)
Position Vacancy Announcement Request

Date: 11/12/2024 Department: President's Office

SUS ☒ SUBR ☐ SULC ☐ SUAREC ☐ SUNO ☐ SUSLA ☐

Application Deadline: Open until filled Date position to be filled: _____

Position Title: Chief Human Resources Officer Civil Service Pay Level: _____

Salary (annual): _____ or Salary Range: $110,000 to $140,000

Please check all categories that apply to this position:

Status:	**Faculty Position**	**Unclassified Position**	**Classified Position**
☐ Part-time % of time	☐ Temporary	☐ Administrative	☐ Probationary
☒ Full-Time	☐ Tenure	☐ Temporary	☐ Job Appointment
	☐ Tenure Track (Probationary)	☒ Permanent	☐ Provisional Appointment
	☐ Grant	☐ Grant	FOR HR USE ONLY:
	☐ Contract	☐ Contract	CS Job Code:

Contact Person: Corinne M. Blache Telephone No: (225) 771-4680

Contact Email Address: corinne.blache@sus.edu

Contact e-mail address is for:

☐ Human Resources utilization only ☒ posting to VAS website

Brief job description [Maximum 12 lines @ 250 characters (including spaces) per line]:

As part of the President's Executive Cabinet, this System position is directly responsible for leading managers of the division and indirectly responsible for all employees within the division. The CHRO establishes and implements Human Resources (HR) efforts that effectively communicate and support the System's mission and strategic vision, by developing HR plans and strategies to support the achievement of the System's overall business operations objectives.

The ideal candidate will function as a strategic business advisor to the executive/senior management regarding key organizational and management issues. CHRO will work with the System's executive management team to establish a sound plan of management succession that corresponds to the strategy and objectives of the University. The CHRO develops comprehensive strategic recruiting, and retention plans to meet the human capital needs of strategic goals, as well as develop and implement comprehensive compensation and benefits plans that are competitive and cost-effective. The CHRO will provide overall leadership and guidance to the HR function by overseeing talent acquisition, talent development, succession planning, retention, training, leadership development, compensation and benefits globally.

Minimal qualifications [Maximum 12 lines @ 250 characters (including spaces) per line]:

- A master's degree in Human Resources Management or equivalent field and 7 years of Human Resources experience
- Demonstrated knowledge of federal and state laws and regulations, statues and legal precedence relating to human resources, employer-employee relations and equal employment opportunity
- Working knowledge of health and welfare benefits, Workers' Compensation, classification and compensation systems
- SPHR or SHRM-SCP certification preferred
- Experience with Banner, La.gov ERP, and Argos

Remarks/How To Apply (letter of application, curriculum vita, resume', references, etc)/Mailing Address
[Maximum 12 lines @ 250 characters (including spaces) per line]:

All interested applicants must complete a Southern University Employment Application ***(insert link to application form)*** as well as submit a resume via email to: corinne.blache@sus.edu.

Point of Contact: Corinne M. Blache

Criminal background check and reference verification is required.

The Southern University System (System) is an equal employment opportunity employer and serves as a model employer for individuals with disabilities. The System does not discriminate against applicants or employees on the basis of race, color, religion, sex, national origin, political affiliation, disability, age, or pregnancy, and prohibits harassment of any type. Applicants with disabilities may be entitled to reasonable accommodation under the Americans with Disabilities Act and certain state laws. A reasonable accommodation is a change in the way things are normally done which will ensure an equal employment opportunity without imposing undue hardship on the SUS. Please inform HR@subr.edu if you need assistance completing this application or to otherwise participate in this application process.

***Note:* Approved Position Vacancy Authorization form(s) must be received in the Office of Human Resources before vacant positions will be announced.**

Chief Human Resources Officer

As part of the President's Executive Cabinet, this System position is directly responsible for leading managers of the division and indirectly responsible for all employees within the division. The CHRO establishes and implements Human Resources (HR) efforts that effectively communicate and support the System's mission and strategic vision, by developing HR plans and strategies to support the achievement of the System's overall business operations objectives.

The ideal candidate will function as a strategic business advisor to the executive/senior management regarding key organizational and management issues. CHRO will work with the System's executive management team to establish a sound plan of management succession that corresponds to the strategy and objectives of the University. The CHRO develops comprehensive strategic recruiting, and retention plans to meet the human capital needs of strategic goals, as well as develop and implement comprehensive compensation and benefits plans that are competitive and cost-effective. The CHRO will provide overall leadership and guidance to the HR function by overseeing talent acquisition, talent development, succession planning, retention, training, leadership development, compensation and benefits globally.

Education and Work Experience

- A master's degree in Human Resources Management or equivalent field and 7 years of Human Resources experience
- Demonstrated knowledge of federal and state laws and regulations, statues and legal precedence relating to human resources, employer-employee relations and equal employment opportunity
- Working knowledge of health and welfare benefits, Workers' Compensation, classification and compensation systems
- SPHR or SHRM-SCP certification preferred
- Experience with Banner, LaGOV ERP, and Argos

Required Skills/Abilities

- Excellent verbal and written communication skills
- Excellent interpersonal and conflict resolution skills
- Excellent organizational skills and attention to detail
- Strong analytical and problem-solving skills
- Strong supervisory and leadership skills

Salary Range $110,000 - $140,000

Physical Requirements

- Prolonged periods of sitting at a desk and working on a computer.
- Must be able to lift 15 pounds at times.

DAWN M. HARRIS, MBA, MS, SHRM-SCP

SENIOR HUMAN RESOURCES PROFESSIONAL

[redacted]@gmail.com | 225-[redacted] | www.linkedin.com/in/dawnmharrismba

Accomplished Senior Human Resources leader with over 20 years of progressive experience in managing HR functions across diverse organizations, including higher education, government, and healthcare. Proven track record in driving strategic HR initiatives that improve operational efficiency, compliance, and employee engagement. Expertise in strategic management, HR systems optimization, diversity, equity and inclusion initiatives, employee engagement, HR partnerships and strategy alignment to drive organizational efficiency.

EDUCATION

Masters of Business Administration, Human Resources Management, New York Institute of Technology
Masters of Science, Sport & Fitness Administration, Troy University
Bachelors of Science, Therapeutic Recreation, Southern University and A&M College

CERTIFICATIONS

Society for Human Resource Management Senior Certified Professional (SHRM-SCP),
Society for Human Resource Management (SHRM)
Diversity, Equity & Inclusion Certificate, University of South Florida
Cybersecurity Practitioner Certificate, IBM

PROFESSIONAL EXPERIENCE

SOUTHERN UNIVERSITY BATON ROUGE LANDMASS **Dec 2018 - Present**
Human Resources Director
Southern University and A&M College, Southern University Law Center, Southern University Agricultural Research and Extension Center, College of Agricultural, Family, and Consumer Sciences, and Southern University Laboratory School

- Leads all Human Resources operations across multiple campuses, providing strategic guidance on management, training, conflict resolution, Ellucian BANNER HR modifications and HR compliance with federal and state regulations.
- Creates department goals in alignment with strategic plan and business needs.
- Continuously evaluate and enhance departmental programs and processes to improve efficiency and compliance.
- Collaborates with Campus HR Directors to create cohesive Human Resources policies, procedures and practices.
- Works closely with campus stakeholders in Finance and Administration to ensure timely and accurate payroll processing.
- Designs and implements training, through asynchronous and synchronous instruction for faculty and staff.
- Streamlined paper-based HR processes by implementing electronic systems through dynamic forms and BANNER workflow, reducing time-to-hire.
- Established a recruitment and hiring process for Southern University's participation in NASA's Mentor-Protégé Program. The recruits' success resulted in SU receipt of the 2021 Small Business Mentor Protégé of the Year award.
- Restructured and implemented Affordable Care Act procedures, resulting in the first penalty-free IRS transmittal and a savings of approximately $2.3 million.
- Spearheaded the Employee Monitoring Report (EMR) project, successfully reducing Office of Group Benefits (OGB) underpayment/overpayment by $240,000.

PROFESSIONAL EXPERIENCE CONTINUED

- Strategized with COVID-19 pandemic team to implement remote work systems and procedures, and established safe transition processes for employees returning to the office.
- Acted as a champion for NASA and The Boeing Company Lean Six Sigma Project, driving process improvements and operational efficiencies.
- Partnered with the Division of Information Technology (DoIT) to implement Job X, streamlining the student hiring process and improving productivity and compliance.
- Led a digital transformation initiative within HR, modernizing systems and processes for greater efficiency.
- Achieved a 40% increase in employee evaluations and improved civil service audit compliance.
- Initiated ongoing multi campus project that resulted in consolidating redundant payrolls, closing outstanding positions and streamlining the position vacancy authorization process.
- Partnered with DoIT and Academic Affairs to roll out Academic Affairs professional development initiative.
- Partnered with Southern University System HR Directors to host systemwide week of activities aimed at fostering a positive and collaborative workplace culture.

HRIS: Ellucian BANNER, LaGOV ERP, ARGOS, SuccessFactors, Moodle Train

LA BOARD OF REGENTS/ LA OFFICE OF STUDENT FINANCIAL ASSISTANCE
Human Resources Specialist **Dec 2017 - Dec 2018**

- Collaborated with the Human Resources Director to update employee handbook.
- Managed HRIS system and assisted employees at all levels with work related issues including FMLA, workers' compensation, benefits, career development and employee relations issues.
- Updated and standardized job descriptions across all departments to ensure alignment with organizational goals and provide a clear career progression pathway for employees.
- Developed and implemented standard operating procedures (SOPs) that supported effective succession planning, ensuring continuity of operations and leadership development within the organization.
- Implemented a comprehensive succession planning framework, identifying key roles and skill sets needed for future leadership, while fostering employee growth and internal mobility.
- Spearheaded updates to roles and responsibilities regularly, ensuring that staffing needs and future leadership requirements were proactively addressed.

HRIS: LaGOV ERP

LOUISIANA DIVISION OF ADMINISTRATION **Aug 2009 - Dec 2017**
Human Resources Supervisor

- Delegated comprehensive support to 21 state agencies with the utilization of 10 HR professionals.
- Supervised daily HR operations, including benefits administration, retirement planning, training and development, and the execution of special projects.
- Led the successful consolidation and restructuring of 1,000+ employees across the Office of Technology Services and Office of State Human Capital Management (OSHCM) into newly formed agencies.
- Contributed to the OSHCM Lean Six Sigma initiative, identifying and resolving inefficiencies in the Office of Group Benefit employee monitoring report process.
- Played a key role in the State Affordable Care Act (ACA) Employer Response Team to develop and implement procedures ensuring statewide ACA compliance.
- Conducted research and spearheaded the creation of electronic onboarding and personnel action request processes, now adopted by all executive cabinet state agency human resources departments.
- Assessed training needs and developed an agency specific Comprehensive Public Training Program, aligning courses with the agency's policy goals and objectives.

PROFESSIONAL EXPERIENCE CONTINUED

- Managed the seamless transition of two gubernatorial administrations into the Office of the Governor
- Instrumental leadership role in the State Affordable Care Act (ACA) Employer Response Team to develop and implement procedures ensuring statewide ACA compliance.
- Conducted research and spearheaded the creation of electronic onboarding and personnel action request processes, now adopted by all executive cabinet state agency human resources departments.
- Assessed training needs and developed an agency specific Comprehensive Public Training Program, aligning courses with the agency's policy goals and objectives.
- Managed the seamless transition of two gubernatorial administrations into the Office of the Governor.

HRIS: LaGOV ERP

LA DEPARTMENT OF WILDLIFE & FISHERIES

Human Resources Supervisor **Dec 2008 - Dec 2009**
Human Resources Specialist **Oct 2007 - Dec 2008**
Human Resources Analyst B, C **Dec 2006 - Oct 2007**

- Facilitated retirement counseling sessions and conducted new employee orientations to ensure smooth onboarding and retirement planning.
- Reconciled and processed monthly insurance invoices for the Office of Group Benefits, ensuring accuracy and timely payments.
- Offered expert advice on retirement plans and benefits, acting as the go-to resource for employees.
- Processed the full lifecycle of employee personnel actions, from initial hire through retirement, ensuring compliance and accuracy at every stage.
- Audited all personnel action entries to ensure data integrity.
- Supervised 3 human resources professionals.

HRIS: LaGOV ERP

PHNS, INC.

East Coast District Manager **Sept 2004 - Dec 2006**
Corporate Compliance Officer **Aug 2003 - Sept 2004**

- Provided comprehensive Business Process Outsourcing (BPO) solutions for hospitals Health Information Management (HIM) services (medical record management, transcription, coding, release of information, and electronic medical records).
- Supervised a team of 24 employees across 13 states, ensuring high performance and alignment with corporate goals.
- Led corporate compliance initiatives, ensuring adherence to regulatory standards and company policies.
- Evaluated current staffing needs, identifying gaps and determining the need for new hires or skill enhancements for succession planning.
- Analyzed business practices, implemented improvements, and optimized workflows to enhance operational efficiency.
- Recruited, hired, and trained new staff on updated procedures and policies to drive organizational success.

HRIS: Meditech, EPIC, Cerner

PROFESSIONAL EXPERIENCE CONTINUED

- Reconciled and processed monthly insurance invoices for the Office of Group Benefits, ensuring accuracy and timely payments.
- Offered expert advice on retirement plans and benefits, acting as the go-to resource for employees.
- Managed the full lifecycle of employee personnel actions, from initial hire through retirement, ensuring compliance and accuracy at every stage.
- Audited all personnel action entries to ensure data
- Supervised 3 human resources professionals

HRIS: LaGOV ERP

PHNS, INC.

East Coast District Manager **Sept 2004 - Dec 2006**
Corporate Compliance Officer **Aug 2003 - Sept 2004**

- Provided comprehensive Business Process Outsourcing (BPO) solutions for hospitals Health Information Management (HIM) services (medical record management, transcription, coding, release of information, and electronic medical records).
- Supervised a team of 24 employees across 13 states, ensuring high performance and alignment with corporate goals.
- Led corporate compliance initiatives, ensuring adherence to regulatory standards and company policies.
- Evaluated current staffing needs, identifying gaps and determining the need for new hires or skill enhancements for succession planning.
- Analyzed business practices, implemented improvements, and optimized workflows to enhance operational efficiency.
- Recruited, hired, and trained new staff on updated procedures and policies to drive organizational success.

HRIS: Meditech, EPIC, Cerner

VOLUNTEER & COMMUNITY INVOLVEMENT

Second Vice President, Baton Rouge Sigma Alumnae Chapter, Delta Sigma Theta **2023 - Present**
Strategic Planning Chair, Baton Rouge Sigma Alumnae Chapter, Delta Sigma Theta **2023 - Present**
Board Member and Ways & Means Chair, Life Development Foundation **2022 - Present**
State Employee Payroll Benefits Committee Member, State of Louisiana **2018 - Present**
Training & Development Committee, Junior League of Baton Rouge **2022 - 2024**
Diversity, Equity, Inclusion & Belonging Committee, Junior League of Baton Rouge **2020 - 2022**
Vice President, Louisiana Society of Human Resources Managers Association **2018 - 2022**

Mission Statement

Through shared governance, leadership, and a diverse system of unique institutions, the mission of the Southern University and A&M College System is to deliver affordable world-class education, a trained workforce, state-of-the-art research, creative scholarship, and transformational public service to the State of Louisiana, the Nation, and the World.

SOUTHERN UNIVERSITY BOARD OF SUPERVISORS
(Following Personnel Affairs Committee)
February 21, 2025

AGENDA

1. Call to Order
2. Roll Call
3. Adoption of the Agenda
4. Public Comments
5. Resolutions
6. Action Item(s)
   A. Request for Approval of Minutes of January 17, 2025, SUS Board of Supervisors Meeting

   B. Request for Approval of Committee Reports and Recommendations

   C. Request for Approval of REIMAGINE SUSLA 5-Year Strategic Plan

   D. Request Approval for President Shields, Chief Administrative Officer, to provide the name of the consultant by the March board meeting that will provide a comprehensive review of our current system of operations, and to identify opportunities to optimize operational efficiency and effectiveness on all five campuses of the Southern University System.

   E. Consideration of the Recommendation for Southern University Law Center Chancellor EXECUTIVE SESSION*
7. Informational Item(s)
   A. Presidential Report

   B. Legislative Priorities

   C. Chancellor Reports

   D. SU Alumni Executive Director Report

   E. SU Branding and Marketing Discussion
8. Other Business
9. Adjournment

**Pursuant to Louisiana Revised Statute 42:17, executive session may be required.*

SPECIAL RECOGNITION COMMITTEE

January 17, 2025

Leon R. Tarver II Cultural & Heritage Center
Baton Rouge, LA

MINUTES

The meeting of the Southern University Board of Supervisors was called to order by Board Chair Myron K. Lawson.

Board Chair Myron Lawson announced the convening of the Special Recognition Committee.

The invocation was given by Father Clark. The Pledge of Allegiance was led by Mr. Kameron Tillage, a 12th grade honor student at Southern University Laboratory School.

AGENDA ITEM 3: Recognition of Former Board Members

Chairman Lawson and Vice Chairman Whitfield acknowledge the former board members and presented them with a gift.
Chairman Elect Clayton presented a gift from the board to Chairman Lawson and Vice Chairman Whitfield.

AGENDA ITEM 4: Installation of 2025 Board Officers (new and returning members)

Chairman Lawson handed gavel to Chairman – Elect Tony Clayton.

All new and returning members were installed. (Mr. Reggie Abraham, Atty. Quincy Cawthorne, Mr. Donald Henry, Mr. Chris Masingill, Atty Domoine Rutledge, and Mr. Henry Whitehorn.)

AGENDA ITEM 5: Election of 2025 Board Vice Chair

Chairman Clayton open the floor for nominations. Mr. Myron K. Lawson nominated Mr. Reginald Abraham and Miss Dana Bailey second the motion. Atty Domoine Rutledge requested the nomination be closed.

Motion was approved.

Mr. Reginald Abraham is the 2025 Vice Chairman. Mr. Abraham gave a speech and thanked everyone.

AGENDA ITEM 6: SPECIAL PRESENTATIONS

a. Video Presentation by Louisiana Public Broadcasting - Documentary of Southern University Law Center (SUBR)
   Chancellor Pierre/Dr. Merrick presented the documentary

b. Coca-Cola Presentation - "Best of the Best" Award (SUBR)
   The representatives from Coca-Cola presented the University with a check.

c. BREC Baton Rouge Zoo Presentation
   Chancellor Pierre and Dr. Merrick introduced the Zoo Director and the Board Members of BREC. They announced the winner of the naming of the new jaguar at Baton Rouge BREC Zoo. The name is “Lacumba”.

AGENDA ITEM 7: INFORMATIONAL ITEM(s)

A. ABOVE AND BEYOND (Process and Nomination Criteria)

President Shields and Honorable Member Smith informed everyone that they are working on the process and Nomination criteria for the above and beyond award.

Chairman Clayton recognized all political officials in the audience and gave them an opportunity to give greetings and welcome.

AGENDA ITEM 4: ADJUOURNMENT

A motion was made by Attorney Domoine Rutledge to adjourn the meeting.

ATHLETICS COMMITTEE

(Following Special Recognition Committee)
January 17, 2025

Leon R. Tarver II Cultural & Heritage Center
Baton Rouge, LA

MINUTES

The Board Chair Tony Clayton announced the convening of the Athletic Committee. Attorney Domoine Rutledge called the committee meeting to order.

Roll Call by President Shields

Present: Atty. Domoine Rutledge – Chair, Dr. Rani Whitfield – Vice Chair, Mr. Reggie Abraham, Ms. Maple Gaines, Mr. Donald Ray Henry, Mr. Chris Masengill, Mr. Paul Matthews, Mrs. Ann Smith and Mr. Henry Whitehorn, and Atty Tony Clayton – Ex Officio

Absent: None

AGENDA ITEM 3: ADOPTION OF THE AGENDA

There was a motion by Dr. Rani Whitfield and the second by Mr. Paul Matthews to adopt the agenda.

Motion passed.

AGENDA ITEM 4: PUBLIC COMMENTS

Public Comments from Dr. Oswald D'Auvergne and Dr. Igiede – Faculty Senate Organization.

AGENDA ITEM 5: ACTION ITEM(s)

Motion by Mr. Paul Matthews and seconded by Mr. Chris Masingill to approve Action Item 5A.

Motion passed.

A. Request for Approval for Men and Women Track and Field Fall 2025 (SUNO)

AGENDA ITEM 6: OTHER BUSINESS

None

AGENDA ITEM 8: ADJOURNMENT

A motion was made by Mr. Paul Matthews to adjourn the meeting.

FACILITIES AND PROPERTY COMMITTEE

(Following Athletics Committee)
Southern University Baton Rouge Campus
January 17, 2025

Leon R. Tarver II Cultural & Heritage Center
Baton Rouge, LA

MINUTES

The Board Chair Tony Clayton announced the convening of the Facilities and Property Committee. Member Donald Ray Henry called the committee meeting to order.

Roll Call by President Shields

Present: Mr. Donald Ray Henry – Chair, Ms. Maple Gaines – Vice Chair, Ms. Zazell Dudley, Mr. Chris Masingill, Mr. Paul P. Matthews, Atty. Domoine Rutledge, Atty. Edwin Shorty, Mrs. Ann Smith and Dr. Rani Whitfield and Atty. Tony Clayton – Ex Officio

Absent: None

AGENDA ITEM 3: ADOPTION OF THE AGENDA

There was a motion by Atty Edwin Shorty and the second by Ms. Maple Gaines to adopt the agenda.
Motion passed.

AGENDA ITEM 4: PUBLIC COMMENTS

None

AGENDA ITEM 5: ACTION ITEM(s)

Motion by Atty Edwin Shorty and seconded by Mr. Paul Matthews to approve Action Item 5A. Motion Approved.

A. Act 465 0f 023 appropriated $1.65M for the Law Clinic Annex project.
Request appropriation be increased by $800k of Fees and Self-Generated Revenues bringing the total budget authority for the project to $2.4M.

AGENDA ITEM 6: INFORMATIONAL ITEM(s)

A. Facilities Update (SUS)
   1. FY 2025 – 2026 Capital Outlay (eCORTS) Submissions
   2. Capital Outlay Funded Projects List

Mr. Dawson provided an update on all projects. Mr. Donald Ray Henry discussed his visit to SUNO and SUBR.

AGENDA ITEM 7: OTHER BUSINESS

None

AGENDA ITEM 8: ADJOURNMENT

A motion was made by Attorney Edwin Shorty to adjourn the meeting.

FINANCE COMMITTEE

(Following Facilities and Property Committee)
Southern University Baton Rouge Campus
January 17, 2025

Leon R. Tarver II Cultural & Heritage Center
Baton Rouge, LA

MINUTES

The Board Chair Tony Clayton announced the convening of the Finance Committee. Mr. Myron K. Lawson called the committee meeting to order.

Roll Call by President Shields

Present: Mr. Myron K. Lawson – Chair, Mrs. Ann Smith – Vice Chair, Mr. Reggie Abraham, Atty. Quincy Cawthorne, Ms. Zazell Dudley, Ms. Maple Gaines, Mr. Chris Masengill, Atty. Domoine Rutledge and Atty. Tony Clayton– Ex Officio

Absent: None

AGENDA ITEM 3: ADOPTION OF THE AGENDA

There was a motion by Atty Domoine Rutledge and the second by Mrs. Ann Smith to adopt the agenda.

Motion passed.

AGENDA ITEM 4: PUBLIC COMMENTS

None

AGENDA ITEM 5: ACTION ITEM(s):

Motion by Atty Domoine Rutledge and seconded by Mrs. Ann Smith to approve Action Item 5A-5D (1-6) in global.

Motion Approved.

A. Request for approval- IPAD Fee for Incoming First-Year Nursing Students (SUSON)
B. Request for approval for course lab Fee for undergraduate and graduate students enrolled in the Speech Language and Pathology Program (SUBR)
C. Request for approval to Increase Differential Tuition and Mandatory Fee for any graduate, professional, or specialized program and to establish differential tuition for any undergraduate program, including but not limited to programs granting certificates, degrees, diplomas or other credentials of value that has been identified as a high-cost program by the Louisiana Board of Regents amounts by Five (5) Percent (SUBR)
D. 1. Request for approval for Tuition & Fees Increase Effective Fall Semester 2025 (SUNO)
   2. Request for approval for Program Fee Increases for Nursing (SUNO)
   3. Request for approval for Program Fee Increase for Social Work (SUNO)
   4. Request for approval for University Self-Assessed Fee Increase (SUNO)
   5. Request for approval for Housing Increase (SUNO)
   6. Request for approval for Athletic Fee Increase (SUNO)

7~~. Request for approval to eliminate the SUNO Foundation Fee ($5) that is charged to students (SUNO)~~
Removed from agenda.

Motion by Mr. Chris Masingill and seconded by Mrs. Ann Smith to approve Action Item 5E-5F in global to include the modification to the wording from Atty Domoine Rutledge.

Motion Approved.

E. Request for approval pursuant to the final submission of the Baton Rouge Campus Landmass housing assessment report from the vendor, The Board of Supervisors is authorizing the Southern University System Foundation to serve as developer and/or manager of housing projects for the SUBR Campus.

F. Request for approval to proceed with the RFP for food service. (SUS)

Atty Rutledge along with the board is requesting additional information for RFP for food service. This information is requested before the February Meeting. Atty Rutledge asked that when making decisions, please include the students.

AGENDA ITEM 6: INFORMATIONAL ITEM

A. Interim Financial Statement

Mr. McClinton mentioned the financial statements are in the packet. He asked if there were any questions. Ms. Zazell Dudley and Atty Domoine Rutledge had questions that Mr. McClinton addressed. President Shields informed the board that the financial proposals for each campus will be provided at the February meeting.

AGENDA ITEM 7: OTHER BUSINESS:

None

AGENDA ITEM 8: ADJOURNMENT

A motion was made by Mrs. Ann Smith to adjourn the meeting.

LEGAL AFFAIRS COMMITTEE

(Following Finance Committee)
Southern University Baton Rouge Campus
January 17, 2025

Leon R. Tarver II Cultural & Heritage Center
Baton Rouge, LA

MINUTES

The Board Chair Tony Clayton announced the convening of the Legal Affairs Committee. Atty Quincy Cawthorne called the committee meeting to order.

Roll Call by President Shields

Present: Atty. Quincy Cawthorne – Chair Atty. Domoine Rutledge – Vice Chair, Miss Dana Bailey, Ms. Maple L. Gaines, Atty. Edwin Shorty, Mr. Henry Whitehorn, and Atty Tony Clayton – Ex Officio

Absent: None

AGENDA ITEM 3: ADOPTION OF THE AGENDA

Upon the motion by Atty Edwin Shorty and seconded by Mr. Henry Whitehorn the agenda was recommended for adoption.

AGENDA ITEM 4: PUBLIC COMMENTS

None

AGENDA ITEM 5: ACTION ITEM(s)

Motion by Chairman Clayton and seconded by Atty Domoine Rutledge to approve Action Item 5A – 5B in global.

Motion approved.

A. Request Approval of Contracts, Amendments, Agreements, Grants, etc... Equal to or Greater than $300,000.00

Name	Description	Amount
A. Extension of the Bayou Classic CEA	Request for approval to extend the Bayou Classic CEA for four (4) years.	N/A
B. Bid No. 31010-Landmass Wi-Fi Connectivity (SULC)	Lockstep Technology Group, LLC has submitted a competitive proposal for the completion of installation of APs (Access Points), switches, and related infrastructure across the campus.	$ 822,877.72

AGENDA ITEM 6: ADJOURNMENT

A motion was made by Atty Edwin Shorty to adjourn the meeting.

PERSONNEL AFFAIRS COMMITTEE

(Following Legal Affairs Committee)
Southern University Baton Rouge Campus
January 17, 2025

Leon R. Tarver II Cultural & Heritage Center
Baton Rouge, LA

MINUTES

The Board Chair Tony Clayton announced the convening of the Personnel Affairs Committee. Atty Edwin Shorty called the committee meeting to order.

Roll Call by President Shields

Present: Atty. Edwin Shorty– Chair Ms. Maple Gaines – Vice Chair, Ms. Zazell V. Dudley, Mr. Chris Masengill, Mrs. Ann Smith, Mr. Henry Whitehorn and Atty Tony Clayton – Ex Officio

Absent: Mr. Reggie Abraham and Atty Domoine Rutledge

AGENDA ITEM 3: ADOPTION OF THE AGENDA

Upon the motion Mr. Chris Masingill and seconded by Mr. Henry Whitehorn the agenda was recommended for adoption Motion passed

AGENDA ITEM 4: PUBLIC COMMENTS

None

AGENDA ITEM 5: ACTION ITEM(S)

The motion was made by Mr. Chris Masingill and second by Mr. Henry Whitehorn that Action Item 5A be approved.

Motion Approved

A. Request for Approval of Personnel Action on Positions Equal to or Greater than $60,000.00 (SUBR)

Name	Position/Department	Personnel Action	Waived/ Search	Salary Previous	Salary Suggested	Funding Source
1. Tracey Taylor-Jarrell	Executive Director/BOS	Title Change/Salary Increase	N/A	$85,000	$116,000	System

AGENDA ITEM 6: OTHER BUSINESS

None

AGENDA ITEM 7: ADJOURNMENT

A motion was made by Ms. Zazell Dudley to adjourn the meeting.

SOUTHERN UNIVERSITY BOARD OF SUPERVISORS

(Following Personnel Committee)
Southern University Baton Rouge Campus
January 17, 2025

Leon R. Tarver II Cultural & Heritage Center
Baton Rouge, LA

MINUTES

The meeting of the Southern University Board of Supervisors was called to order by Board Chair Tony Clayton.

PRESENT
Mr. Reggie Abraham, Miss Dana Bailey, Atty Tony Clayton, Atty Quincy Cawthorne, Ms. Zazell Dudley, Ms. Maple Gaines, Mr. Donald R. Henry, Mr. Myron K. Lawson, Mr. Chris Masingill, Mr. Paul Matthews, Atty Edwin Shorty, Mrs. Ann Smith, Rev. Dr. Samuel Tolbert and Mr. Henry Whitehorn

ABSENT
Atty Domoine Rutledge and Dr. Rani Whitfield

AGENDA ITEM 3: ADOPTION OF THE AGENDA

Upon the motion by Ms. Zazell Dudley and seconded by Miss Dana Bailey the agenda was recommended for adoption with amendment to Action Item 6C. Chairman Clayton amendment to remove item 6C.

Motion passed.

AGENDA ITEM 4: PUBLIC COMMENTS

None

AGENDA ITEM 5: RESOLUTIONS

Dr. Allen Vital read resolutions for the following:

Resolutions

- Bob Love
- Ronald L. Smith
- Lena Mae Newton Spears
- William Matthew Lockhart Jr.
- Rosevelt Wilson
- Merita Sarrazin Miller
- Aaron Harris
- Carl Lester “Doc” Williams

Commendations

Frances Davis Shaw – SU Class of 1967
Professor Angela Allen Bell

There was a motion by Miss Dana Bailey to approve the read resolutions and commendations and Mr. Myron K. Lawson second the motion.

Motion approved.

AGENDA ITEM 6: ACTION ITEM(s):

There was a motion by Atty Edwin Shorty and a second by Mr. Paul Matthews to approve action item 6A-6B globally.

Motion passed.

A. Request for Approval of Minutes of November 29th, 2024, SUS Board of Supervisors Meeting
B. Request for Approval of Committee Reports and Recommendations
~~C. Resolution Supporting the Naming of the New Jaguar at Baton Rouge BREC Zoo, LaCumba (SUBR)~~

AGENDA ITEM 7: INFORMATIONAL ITEM(s)

A. Presidential Report

B. Chancellor's Reports

C. SU System Foundation Quarterly Report

   Report provided by Mr. Alfred Harrell

D. SU Alumni Federation Quarterly Report

   Report provided by Mr. Darrin Dixon

AGENDA ITEM 8: OTHER BUSINESS

Chairman Clayton thanked everyone for their time and patience for today's meeting. He wished everyone a good weekend.

AGENDA ITEM 9: ADJOURNMENT

A motion was made by Mr. Myron K. Lawson to adjourn the meeting.

SOUTHERN UNIVERSITY
at Shreveport

REIMAGINE SUSLA

5-Year STRATEGIC PLAN 2025-2030

Dr. Aubra J. Gantt
Chancellor

Table of Contents

Historical Overview 3
Chancellor's Message 4
Foreword 5
Strategic Planning Process 6
Mission, Vision, Core Values 7
Strategic Plan Goals 8
Goals, Objectives, Strategies, Performance Indicators
- Goal 1. Foster a Climate of Academic Excellence 9
- Goal 2. Increase Enrollment 11
- Goal 3. Enhance Customer Service and Stewardship of Place 13
- Goal 4. Adopt a Student-Centered Approach 15
- Goal 5. Attract and Retain Qualified Faculty and Staff 17
- Goal 6. Promote a Culture of Institutional Effectiveness 19
- Goal 7. Improve Infrastructure, Facilities, Finance, and Resources 21

Steering Committee 23
Glossary 25

Historical Overview

Southern University at Shreveport Louisiana was established by Act 42 in 1964 by the Louisiana Legislature to serve the Shreveport-Bossier City area. Its basic emphasis was to provide the first two years of typical college and university coursework. Then Governor John H. McKeithen signed the Act on June 27, 1964, and the institution officially opened its doors for instruction on September 19, 1967.

On October 28, 1974, the Louisiana Coordinating Council for Higher Education, currently the Board of Regents, granted to the institution approval to offer six associate degree programs: Business, Office Administration, Natural Sciences, Medical Office Assistant, Social Sciences, and Humanities. Southern University at Shreveport is a comprehensive community college within the Southern University System.

In 1977, the Board of Regents' Master Plan for Higher Education in Louisiana cited, "Southern University should begin immediately to plan programs and services of the type appropriate to a comprehensive community college in order to contribute to the future economic development of the greater Shreveport area." Therein, the institution was charged to expand its one and two year offerings in keeping with the manpower needs of the Shreveport area and to cooperate with nearby vocational-technical schools where possible. The Master Plan defined research activities as "appropriate to further the role of the institution as a comprehensive community college, with lower level undergraduate instruction and public service receiving top priority."

In 1981, the Federal Justice Department mandated that the Southern University System enter into a Consent Decree that led to several major changes for the institution. The Consent Decree, in part, involved the acquisition of a satellite campus site, "preferably in an area of the city that was amenable and accessible to the diverse multi-cultures served by the institution." A downtown location was deemed best, primarily because of the large number of business sites and office workers employed in that area. After conducting assessments of the kinds of educational training needs projected by the downtown employee population, the institution chose to bid on portions of 610 Texas Street in 1987. The Southern University Board of Supervisors, the State Board of Regents, and the Division of Administration approved the bid October 1987. Southern University at Shreveport held its first classes at the downtown site, the Metro Center, in spring of 1988.

The institution has expanded its presence across the city to provide additional educational opportunities and accessibility: The Aerospace Technology Center houses the Airframe & Powerplant Maintenance programs; the Small Business Development Center helps entrepreneurs and businesses start, expand and sustain; the Milam Street Kitchen Incubator & Community Kitchen (MS-KICK) functions as a kitchen incubator/workforce development hybrid to encourage culinary and workforce training entrepreneurship opportunities. The Allen Building, located adjacent to the SUSLA Metro Center was acquired for the purpose of expanding the School of Nursing.

Throughout the years, outstanding leadership has guided Southern University at Shreveport, with eight Chancellors leading the campus. Today there are 3,000 students enrolled in 32 associate degree programs and 13 certificate programs, and one technical diploma.

Message from the Chancellor
Dr. Aubra J. Gantt

To our esteemed students, faculty, staff, alumni, and valued community partners,

As your new Chancellor, it is my privilege and honor to present our first Strategic Plan under my tenure, Reimagining a College of Choice. This plan represents a bold and ambitious vision that addresses the evolving needs of our students and the communities we serve.

While we stand on a proud foundation built by generations of dedicated faculty, staff, and alumni, we also face pressing challenges that compel us to break from tradition and embrace an innovative, future-focused approach. These realities call us to reflect, rethink, and reimagine what our institution can become in service to our students and our region.

This Strategic Plan embodies our commitment to creating a more inclusive, accessible, and student-centered college, one that offers an inviting and productive environment where every student can see a clear and achievable path to success. We will be redefining what it means to provide a high-quality education aligned with the informed choices of our students. Specifically, we plan to invest in transformative student support, expand affordable and high-value credentials, and align our programs with real-world, career-ready outcomes. This reimagined path forward will require us to reconceptualize how we measure student success, academic offerings and community engagement to adapt to emerging priorities.

However, this journey is not one I can undertake alone. The energy, expertise, and dedication of every member of our college community are essential to fulfilling this vision. To our faculty and staff, your unwavering commitment to fostering student success serves as the foundation upon which we build. To our students, your resilience, ambition, and drive to shape your futures are the inspirations that fuel our work each day. And to our partners and supporters, your invaluable investment in our mission will enable us to realize a shared vision of an educational institution that uplifts and transforms our community.

Together, we can Reimagine SUSLA as a beacon of opportunity, a trusted resource, and a transformative force in our region and beyond. Thank you for your dedication and for joining us on this journey to create a vibrant future. I am eager to work alongside each of you as we reimagine what it means to be a College of Choice.

With deep gratitude and steadfast commitment,

Aubra J. Gantt, Ed.D.
Chancellor

Foreword

In the wake of an era marked by an unexpected global pandemic, compelling adaptive changes in higher education, and the changing demands of our students facing the globalization of their career opportunities, we are excited to unveil our 2030 Strategic Plan, a blueprint for reimagining our institution as a College of Choice by 2030. This plan is a guiding framework for transforming our mindset to break with our tradition while keeping a diligent eye on increasing enrollment. Our renewed emphasis will be on long-term student success: early momentum, attainment of high-value credentials, and career placement. We are committed to elevating the college's academic and career-focused offerings and strengthening its position as a leading, accessible, and innovative institution within our state and beyond.

Guided by the theme *Reimagining SUSLA as a College of Choice in 2030*, this plan aligns with the state's ambitious goal: to have 60% of its working-age citizens equipped with a credential of value by 2030[1]. To achieve this, we will adopt the state's *Meauxmentum Approach*[2], an evidence-based strategy designed to significantly improve student success and close equity gaps. We plan to use this approach to enhance our guided pathway student success strategy, which structures our students' educational journey to ensure a clearer, more efficient, and affordable path to graduation and employment. This approach enhances whole-university intentionality toward shared goals and values—all critical to the success of our reimagining journey.

Our current status, as reflected in the Integrated Postsecondary Education Data System (IPEDS)[3], highlights the need for transformative change. Our college has higher tuition costs than our peers, and more students rely on financial aid to pursue their education. Our retention and graduation rates fall below the average for similar institutions, and graduates' earnings are also lower than the median for two-year colleges. These indicators serve as a call to action: we must reimagine our institution better to serve our students, community, and region.

Focusing on academic excellence and student success, our Strategic Plan outlines our commitment to expanding program offerings, developing tailored certificate and diploma options, and creating a more vibrant and caring campus community. Together, these efforts will empower our students to achieve their goals and thrive in an ever-changing workforce.

Our journey toward 2030 is more than an institutional transformation; it is a promise to our students, faculty, staff, and community. Through the *Meauxmentum Approach* and our broader 2030 Strategic Plan, we look forward to building a future where our college embodies the ideal of choice and opportunity for all.

---

[1] laregents.edu/masterplan/

[2] laregents.edu/meauxmentum-framework/

[3] https://collegescorecard.ed.gov/school/?160649-Southern-University-at-Shreveport

Strategic Planning Process

In July 2023, SUSLA's new chancellor launched the *Reimagine SUSLA* campaign, a bold initiative designed to engage stakeholders, gather diverse perspectives, and lay the groundwork for developing a Strategic Plan that redefines SUSLA as a college of choice. Through a series of inclusive dialogues with faculty, staff, students, and the broader community, the chancellor set the foundation for a collaborative planning process focused on transformative change and long-term success.

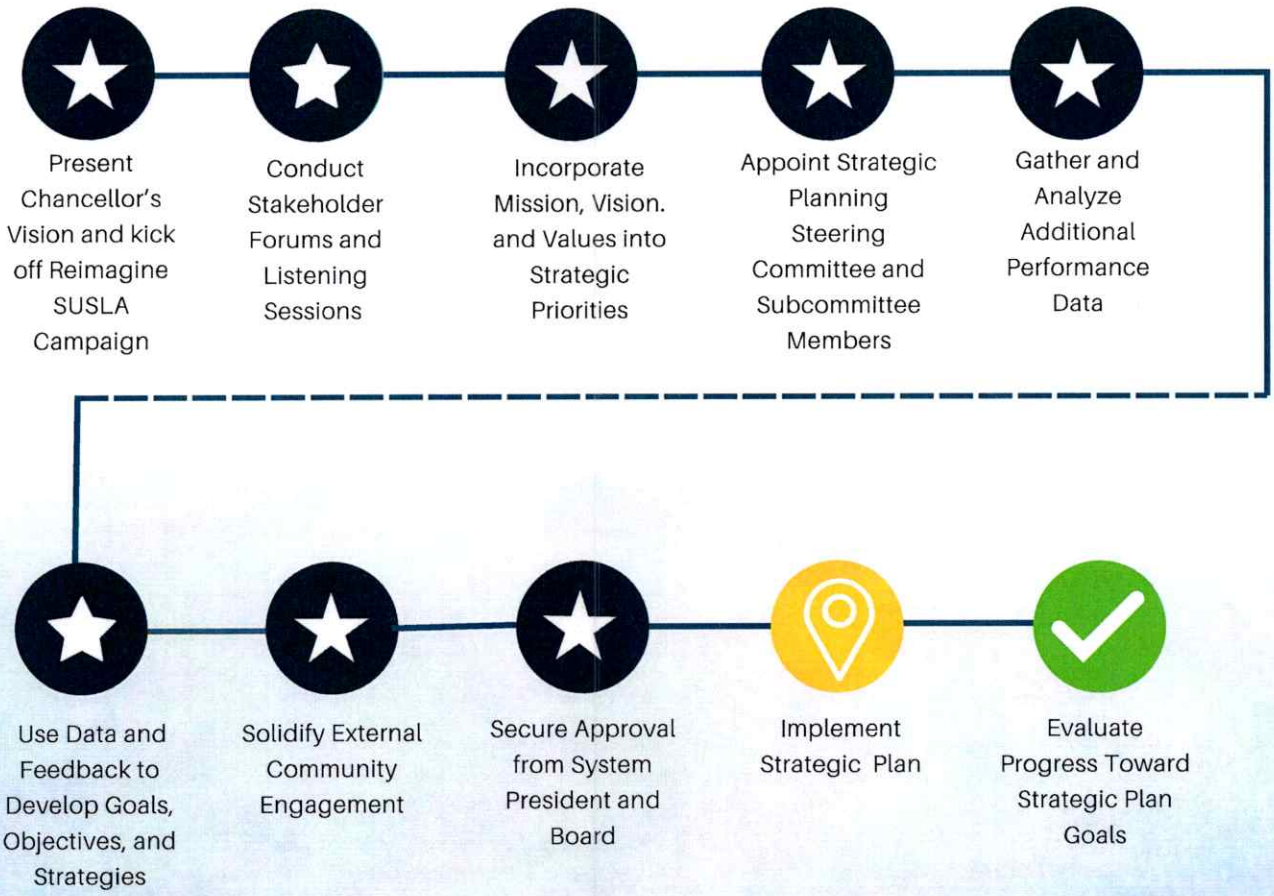

Strategic Plan Implementation and Evaluation

SUSLA will maintain an implementation schedule to serve as a roadmap, ensuring a well-aligned and efficiently executed plan. Our leaders will translate strategic objectives into actionable tasks and assign responsibilities across departments. This accountability measure will be used to allocate resources and set clear timelines for execution and monitoring.

SUSLA's Office of Institutional Effectiveness will track and publish progress annually. Such evaluation will help faculty and staff to assess performance against goals, identify potential roadblocks, and adjust strategies as needed. By continuously monitoring results and gathering feedback, the institution can refine its approach to ensure sustained success and adaptability in a dynamic environment.

SUSLA
SOUTHERN UNIVERSITY SHREVEPORT LOUISIANA
Excellence · Integrity · Accountability · Service · Diversity

OUR MISSION

Southern University at Shreveport, a unit of the Southern University and A & M college System, a historically black comprehensive community college serving Northwest Louisiana and beyond, is committed to teaching and preparing traditional and non-traditional students for degree attainment, transfer, workforce, continuous learning, and self-improvement. This preparation is available through multiple delivery methods and instructional sites for students seeking certificates, technical diplomas and associate degrees.

OUR VISION

To become the "College of Choice" in Northwest Louisiana by implementing and supporting viable academic programs with qualified faculty and staff, and quality customer service.

CORE VALUES

EXCELLENCE

We engage in every endeavor guided by standards of quality and excellence. We ensure, through the various forms of presentation and/or service delivery, that our efforts are of the highest quality.

INTEGRITY

We ensure a viable institution by fostering a culture of trust, respect and dignity. We uphold the highest standards of academic & professional ethics & provide opportunities for the campus community to be informed and engaged in the governance of the University.

ACCOUNTABILITY

We hold ourselves accountable to fulfilling the mission of the institution. We practice professionalism, assume responsibility for our conduct and embrace accountability as an expectation of servicing students.

SERVICE

We engage in actions that demonstrate a total commitment to delivering services to all our constituents. While students are our first priority, we recognize that our customers also include ourselves, parents, other higher education institutions, our community, business and industry.

DIVERSITY

We affirm that diversity is crucial to a society, as it enriches that educational experience and celebrates differences among individuals. Southern University at Shreveport embraces and understands the importance of providing an education and an environment that promotes the uniqueness of students, faculty, staff and the communities that we serve.

Reimagine SUSLA 2030

GOALS

The 2025-2030 Strategic Plan reflects the yearlong collaborative genius of major SUSLA stakeholders. The roadmap promises to fulfill the seven goals that will serve as the launching pad for the university's continued growth.

1. Foster a Climate of Academic Excellence

2. Increase Enrollment

3. Enhance Customer Service and Stewardship of Place

4. Adopt a Student-Centered Approach

5. Attract and Retain Qualified Faculty and Staff

6. Promote a Culture of Institutional Effectiveness

7. Improve Infrastructure, Facilities, Finance, and Resources

GOAL

1 Foster a Climate of Academic Excellence

DESCRIPTION

Southern University at Shreveport is dedicated to providing quality education and workforce preparation. As such, we desire to create attractive programs to help students achieve their academic and vocational goals. The Institution envisions a multifaceted approach that nurtures curiosity, critical thinking, and a passion for learning. Robust support systems will ensure each student's success. Best practices form the foundation in this climate, ultimately creating a thriving community dedicated to excellence.

OBJECTIVE 1.1
Develop Inspiring Curricula with Clearly-Defined Program Maps

Strategy 1.1.1. Provide resources and support for developing challenging, relevant, industry-aligned curricula

Strategy 1.1.2. Create new stackable and technical program certificates

Strategy 1.1.3. Incorporate high-impact practices by designing courses with experiential learning opportunities like internships, service-learning, and research projects

Strategy 1.1.4. Map programs to specific career outcomes and detailed career pathways showing progression from certificates to diplomas to associate degrees and beyond

OBJECTIVE 1.2
Facilitate Academic Momentum and Completion

Strategy 1.2.1. Manage prerequisites to minimize unnecessary courses and streamline sequences to prevent delays in student progression

Strategy 1.2.2. Ensure completion of required discipline-related general education English and math courses within students' first academic year, as applicable

Strategy 1.2.3. Redesign instruction to build foundational skills and improve outcomes in high-impact catapult courses

Strategy 1.2.4. Develop intrusive and early alert advisement approaches to provide timely guidance and support before students encounter significant challenges

OBJECTIVE 1.3
Ensure Continuous Improvement of Academic Programs

Strategy 1.3.1 Redesign and implement a continuous program review and assessment process to provide program pathways and outcomes for university transfer and the workforce

Strategy 1.3.2 Utilize innovative teaching modes such as flipped classroom scenarios

Strategy 1.3.3. Create and utilize peer and project-based learning assessments

Strategy 1.3.4. Align course and program assessment with performance evaluations

GOAL 1

OUTCOMES

- **Increase the number of technical certificates by 20%**
- **Achieve 75% respondent satisfaction with learning materials and activities as indicated on course evaluations**
- **Achieve 75% respondent satisfaction with learning environment and experiences as indicated on the Graduate Exit Survey**

PERFORMANCE INDICATORS

- **Number of new high-demand, high-wage certificate programs**
- **Passage rates in English and mathematics courses**
- **Passage rates in gateway courses**
- **Reduced time to reach catapult courses**
- **Early Momentum metrics**
- **Number of project-based learning opportunities**
- **Number of peer assessments**
- **Number of flipped classroom activities**

Engineering Technology-Process Technology

SUSLA's first cohort of graduates from this program received lucrative offers to work on and offshore as instrument technicians and process operators.

GOAL 2

Increase Enrollment

DESCRIPTION

Increased Enrollment requires intentional strategies to expand access and affordability while meeting the evolving needs of our students. By offering diverse, flexible, and industry-relevant programs, we will provide clear pathways to career readiness and educational success. Our commitment includes delivering robust support services that assist students from enrollment to completion, ensuring they are retained, sustained, and empowered to achieve their goals.

OBJECTIVE 2.1

Increase Availability and Accessibility of Academic Offerings

Strategy 2.1.1. Reimagine and construct online, hyperflex, weekend, and evening course schedules to accommodate the needs of a diverse student population

Strategy 2.1.2. Diversify instructional sites

OBJECTIVE 2.2

Expand Student Pool through Enhanced Promotion and Outreach

Strategy 2.2.1. Enhance recruitment branding and expand digital footprint

Strategy 2.2.2. Explore multicultural markets

Strategy 2.2.3. Strengthen community engagement

OBJECTIVE 2.3

Improve Student Enrollment Processes and Services

Strategy 2.3.1. Streamline enrollment processes

Strategy 2.3.2. Build and maintain a comprehensive retention network

Strategy 2.3.3. Expand student reclamation efforts

Strategy 2.3.4. Increase and improve student access to financial aid support resources

OBJECTIVE 2.4

Monitor and Evaluate Enrollment Strategies

Strategy 2.4.1. Incorporate data analytics, projections, and best practices in enrollment planning

Strategy 2.4.2. Establish and review student and community feedback mechanisms

GOAL 2

OUTCOMES

- Expand reach of the University's digital channels (Facebook, Twitter, Instagram, and search engines) by 3% yearly
- Increase the average fall conversion rate of new freshman, readmit, and transfer students from a baseline average of 72% to 85% by 2030
- Increase full-time equivalent (FTE) enrollment by 2% each year

PERFORMANCE INDICATORS

- Physical and digital visibility metrics
- Number of prospective students
- Time from application to enrollment
- Total headcount enrollment
- Yearly Full-time-equivalent (FTE) student enrollment
- The number of retained/returning students
- Number of financial aid fund sources (scholarships, grants, donations, etc.)
- Student satisfaction

GOAL 3 Enhance Customer Service and Stewardship of Place

DESCRIPTION

SUSLA is dedicated to developing a culture of attentiveness and respect for patrons and the community. We aim to reflect genuine care in our interactions and commit to meeting customer needs. We desire to create a unique and meaningful connection that enhances loyalty and promotes stewardship, sustaining our institution as an upstanding citizen of the community we serve.

OBJECTIVE 3.1
Elevate Service Performance Standards

Strategy 3.1.1. Assess and update telephony

Strategy 3.1.2. Develop clear communication channels for students, employees, and the community

Strategy 3.1.2. Conduct cross-departmental training

Strategy 3.1.4. Recognize and reward excellent service and stewardship

OBJECTIVE 3.2
Improve Institutional Reputation

Strategy 3.2.1. Embed customer service expectations in job descriptions, screening activities, and employment orientations

Strategy 3.2.2. Review feedback mechanisms for continuous improvement, ensuring that services are responsive and relevant

Strategy 3.2.3. Enhance brand awareness

Strategy 3.2.4. Encourage volunteerism and service learning to reinforce the University's commitment to social responsibility

OBJECTIVE 3.3
Bridge Community Engagement

Strategy 3.3.1. Establish advisory boards composed of community leaders to provide input on college programs and initiatives, ensuring alignment with local needs

Strategy 3.3.2. Host open houses, workshops, and lycea to invite community members to campus

Strategy 3.3.2. Showcase the college's resources, expertise, and programs, encouraging greater community involvement and awareness

Strategy 3.3.4. Present cultural and social activities that reflect the diversity of the local community, establishing SUSLA as a hub for enrichment, enlightenment, and inclusivity

GOAL 3

OBJECTIVE 3.4
Strengthen Partnerships

Strategy 3.4.1. Leverage alumni to connect with the community by hosting events, mentorship programs, or guest speaking opportunities

Strategy 3.4.2. Collaborate with local businesses, nonprofits, and government agencies to create community service programs and initiatives

OUTCOMES

- **Decrease the number of service-related complaints by 50%**
- **Narrow the performance gap between the importance and satisfaction scores for campus services on Noel Levitz's Student Satisfaction Inventory (SSI) and Faculty/Staff Institutional Priorities Inventory (IPS) to less than one (1) point**
- **Increase the number of community-based programs by 5% by 2030**

PERFORMANCE INDICATORS

- **Institutional customer service survey results**
- **Employer satisfaction ratings**
- **Number of employer partnerships**
- **Number of sponsorships secured**
- **Number and types of community-based programs**
- **Number of faculty and staff volunteer hours**
- **Attendance rates at community service events**

GOAL 4 Adopt a Student-Centered Approach

DESCRIPTION

Adopting a student-centered approach involves prioritizing our learners' unique needs, interests, and learning styles. We aim to create a supportive, inclusive, and technology-rich environment that promotes teaching and learning best practices while cultivating critical thinking and lifelong learning skills.

OBJECTIVE 4.1

Provide High-Touch Programs and Services Aligned with Student Needs

Strategy 4.1.1. Implement comprehensive orientation programs that encourage students to explore, choose, plan, and complete a program of study efficiently and affordably.

Strategy 4.1.2. Strengthen academic advising, tutoring, mentorship, and other support services to help students navigate chosen pathways and collegiate life

Strategy 4.1.3. Expand financial literacy and management programs to help reduce student debt

Strategy 4.1.4. Enhance career preparation and job placement services

Strategy 4.1.5. Use student assessments and feedback to drive continuous improvement

OBJECTIVE 4.2

Promote Emotional Safety and Well-Being

Strategy 4.2.1. Organize focus groups to discuss emotional safety issues and gather data

Strategy 4.2.2. Provide access to counseling services and other mental health resources

OBJECTIVE 4.3

Maintain Inclusive, Student-Forward Processes and Activities to Improve Engagement

Strategy 4.3.1. Encourage and support active participation in governance and decision-making processes

Strategy 4.3.2. Promote clubs, organizations, co-curricular and extracurricular activities that align with student needs and interests

Strategy 4.3.3. Highlight student success stories and testimonials to inspire current and prospective students

GOAL 4

OUTCOMES

- **Exceed national cohort institutional scores on the Community College Survey of Student Engagement (CCSSE) by 2030.**
- **Increase The institutional Fall-to Fall retention rate from a baseline of 40% to 45% by 2030.**
- **Increase the 3-year graduation rate from a baseline of 9.2% to 20% by 2030.**

PERFORMANCE INDICATORS

- **Student satisfaction survey results**
- **Student retention rates**
- **Decreased time-to-degree**
- **Student completion rates**
- **Student placement rates**
- **Amount of student engagement /participation in activities**

Student Government Association

The Student Government Association is composed of elected representatives from the student body. Collectively, they are the voice of the students and promote student life that enhances the intellectual, physical, social, and cultural atmosphere of SUSLA.

GOAL 5 ATTRACT QUALIFIED FACULTY AND STAFF

DESCRIPTION

SUSLA will attract and retain top talent by offering competitive compensation, professional development opportunities, and a supportive, inclusive workplace. Prioritizing work-life balance, modern facilities, and a culture of recognition, we will empower faculty and staff to thrive. These efforts will position SUSLA as an employer of choice, driving our vision for excellence and innovation.

OBJECTIVE 5.1

Enhance the Institution's Reputation as an Employer of Choice

Strategy 5.1.1. Build employer branding and visibility

Strategy 5.1.2. Develop competitive compensation plans for personnel

Strategy 5.1.3. Improve responsiveness and streamline hiring and onboarding processes

OBJECTIVE 5.2

Enhance Faculty and Staff Diversity to Reflect the Institution's Commitment to an Inclusive Environment.

Strategy 5.2.1. Implement inclusion training for hiring managers and leadership

Strategy 5.2.2. Establish committees to provide oversight and feedback on workplace culture initiatives

Strategy 5.2.3. Maintain mentorship programs for new employees to foster inclusion and professional growth

OBJECTIVE 5.3

Strengthen Employee Engagement and Retention

Strategy 5.3.1. Encourage interdisciplinary projects and cross-departmental collaboration

Strategy 5.3.2. Establish joint faculty and staff committees to enhance shared governance and address critical issues

Strategy 5.3.3. Ensure clear pathways for promotion and growth opportunities

Strategy 5.3.4. Implement recognition programs that celebrate employee achievements

OBJECTIVE 5.4

Champion a Culture of Continuous Learning and Growth

Strategy 5.4.1. Invest in professional development opportunities tailored to faculty and staff needs

Strategy 5.4.2. Encourage participation in professional organizations

Strategy 5.4.3. Institute supervisory leadership training series that includes evaluation, coaching, change management, emotional intelligence, and conflict management

Strategy 5.4.4. Inform continuous improvement with data collection, feedback, and open communication

GOAL 5

OBJECTIVE 5.5

Create an Environment that Supports Work-Life Balance and Employee Well-Being

Strategy 5.5.1. Establish policies and practices to support mental health and wellness initiatives

Strategy 5.5.2. Design and employ flexible work plans and schedules to maximize institutional productivity

Strategy 5.5.3. Create comfortable, functional office environments that include rest areas and collaborative breakout spaces

OUTCOMES

- **Achieve 75% respondent satisfaction with experiences, engagement, career management, and resources as indicated on the Institutional Employee Pulse Survey**
- **Achieve 75% respondent satisfaction with selection and onboarding processes as indicated on the Institutional New Hire Survey.**
- **Achieve 70% of employee ratings of 3 (of 4) on the engagement and professional development constructs of the performance evaluation.**

PERFORMANCE INDICATORS

- **Employee satisfaction survey results**
- **New hire survey results**
- **Number of professional development opportunities**
- **Number of participants in professional organizations and training sessions**
- **Number of employee award recipients**
- **Number of positive employee evaluation results**
- **Number of new hires retained**
- **Personnel retention rate**

GOAL 6 PROMOTE A CULTURE OF INSTITUTIONAL EFFECTIVENESS

DESCRIPTION

Southern University at Shreveport keeps institutional effectiveness at its forefront. We reinforce our core values through constant assessment, evaluation, and data-driven decision-making. We achieve and pursue Accreditation with the Southern Association of Colleges and Schools Commission on Colleges (SACSCOC) to ensure high-quality standards for our University and enhance the value of the credentials we offer. This commitment to quality and continuous improvement will resonate in our operations, processes, services, and spirit.

OBJECTIVE 6.1

Improve the Overall Quality of Operational Services and Processes

Strategy 6.1.1. Maintain a cycle of assessment and evaluation for all programs and services

Strategy 6.1.2. Develop a performance management system that promotes accountability and achievement

OBJECTIVE 6.2

Increase the institutional Capacity to Make Strategic, Data-Informed Decisions

Strategy 6.2.1. Establish sound systems and processes for data collection, storage, and dissemination

Strategy 6.2.2. Provide training on data analytics and results-driven improvement

OBJECTIVE 6.3

Ensure institutional Compliance with Federal, Regional, State, and System Standards

Strategy 6.3.1. Orchestrate and maintain a process to manage policies for student success, regulatory compliance, and institutional growth

Strategy 6.3.2. Refine readiness audit processes

Strategy 6.3.3. Implement a campus-wide accreditation training program

Strategy 6.3.4. Develop a sustainable substantive change process

Strategy 6.3.5. Maximize funding formula and system scorecard performance

GOAL

6

OUTCOMES

- Complete 75% of objective tasks on the Strategic Plan Implementation schedule by 2028
- Achieve a 75% departmental / unit accomplished rating on the Use of Results section of the Institutional Outcomes Assessment Rubric
- Achieve 100% compliance on the Fifth-Year Interim Accreditation Report
- Achieve 100% compliance on the Decennial Accreditation Report

PERFORMANCE INDICATORS

- Institutional survey results
- Strategic plan assessment results
- Academic and operational unit assessment reports
- Reduced standardized reporting discrepancies
- Accreditation compliance

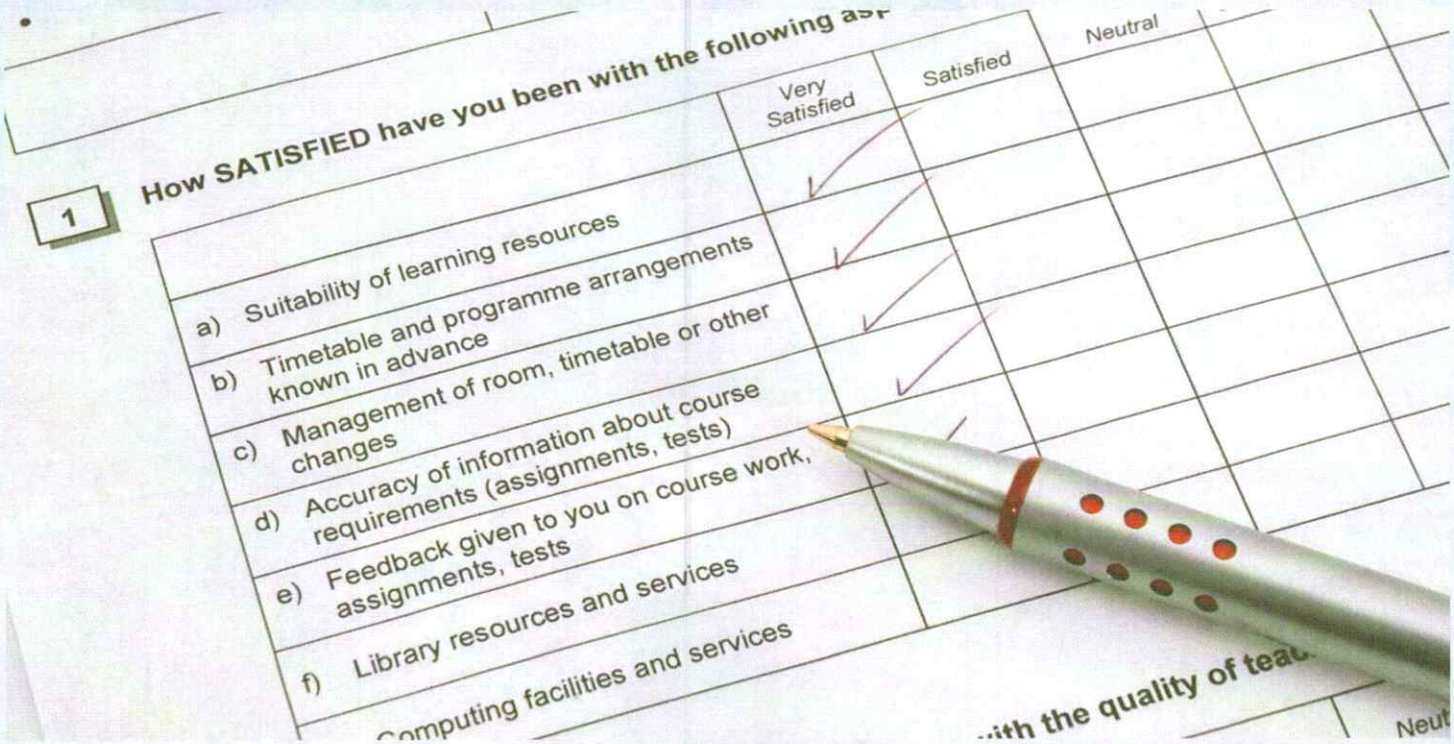

GOAL 7 IMPROVE INFRASTRUCTURE, FACILITIES, FINANCE, AND RESOURCES

DESCRIPTION

Improving infrastructure, facilities, finance, and resources is essential for creating a thriving ecology that supports growth and learning. Such improvement requires investing in modern facilities equipped with cutting-edge technology that enhances educational experiences and encourages collaboration. Additionally, establishing sound financial practices ensures sustainable funding for ongoing maintenance and future developments. By prioritizing resource allocation and creating a welcoming, accessible campus, SUSLA can better meet the needs of our community and promote overall success.

OBJECTIVE 7.1

Enhance Physical Infrastructure

Strategy 7.1.1. Develop and implement a comprehensive deferred and preventative maintenance plan for HVAC, plumbing, and other integral systems

Strategy 7.1.2. Improve parking and visibility, including numeration and signage

Strategy 7.1.3. Continuously upgrade surveillance, lighting, and emergency response systems to provide students, faculty, staff, and visitors with a secure environment

Strategy 7.1.4. Maintain a campus beautification program involving employees and students

Strategy 7.1.5. Conduct operational and risk assessments to inform continuous improvement

OBJECTIVE 7.2

Increase Access to Cutting-Edge Technology

Strategy 7.2.1. Integrate smart technology in buildings

Strategy 7.2.2. Renovate classrooms to incorporate modern educational technology

Strategy 7.2.3. Upgrade laboratory spaces to support advanced research and student learning

Strategy 7.2.4. Strengthen cybersecurity protocols to protect sensitive data and comply with relevant regulations

OBJECTIVE 7.3

Optimize Resource Allocation and Management

Strategy 7.3.1. Implement a transparent process to allocate resources based on strategic priorities and program productivity

Strategy 7.3.2. Update short- and long-term financial forecasts to guide decision-making

Strategy 7.3.3. Improve managerial capacity for fiscal prudence and budget management

Strategy 7.3.4. Reduce expenditures by expanding campus programs and initiatives such as recycling, energy-efficient lighting, waste reduction, and water conservation

Strategy 7.3.5. Periodically review and update financial strategy and conduct an annual assessment of financial sustainability

OBJECTIVE 7.4

Diversify Revenue Sources

Strategy 7.4.1. Identify and pursue academic and commercial activities that generate funds for re-investment and endowment establishment

Strategy 7.4.2. Coordinate with the Southern University at Shreveport and Southern University System Foundations to deliver new fundraising campaigns and increase philanthropic income

Strategy 7.4.3. Engage and leverage employee skills, knowledge, and service to increase new revenue received from grants

OUTCOMES

- **Decrease the number of work order requests by 5% yearly**
- **Decrease the expenditures for major repairs by 5% yearly**
- **Achieve a 70% respondent return of good or excellent ratings on safety and facilities surveys**
- **Increase non-state revenues by 2.5% yearly**
- **Increase the number of donors by 5% yearly**
- **Increase alumni giving by 5% each year**
- **Increase the total dollar value of grant awards by 2% each year**

PERFORMANCE INDICATORS

- **Number of work order requests**
- **Maintenance expenditures**
- **Satisfaction survey results**
- **Cost savings**
- **Number of donors**
- **Donation and gift amounts**
- **Endowment balance**
- **Grant funding**

Aerospace Technology Center

Metro Center

Business Incubator

Milam Street Kitchen Incubator

Reimagine SUSLA
The 2-Year College of Choice

STRATEGIC PLANNING STEERING COMMITTEE

DR. AUBRA J. GANTT, CHANCELLOR

CO-CHAIRMEN:

DR. DEVONYE BROWN
DIRECTOR, OUTCOMES ASSESSMENT & QUALITY MANAGEMENT/SACSCOC LIAISON

MR. MAJOR BROCK
QEP DIRECTOR
ASSISTANT DIRECTOR, STRATEGIC PLANNING, EVALUATION AND POLICY

I. Survey & Forums	**Africa Price, Transition Team Co-Chairman** **Burnadine Moss Anderson, Transition Team Co-Chairman**
II. Aspirant/Peer Group	**Dr. Devonye Brown** **Dameoyn Woodley**
III. Benchmarking	**Dr. Veloria Nanze** **Dr. Dometrius Hill** **Stephanie Graham** **Frank Williams**
IV. Communications	**Roshundra Davis** **Marlon Davenport, SGA President** **Ms. Angel Freeney, Student Representative** **Ms. Tamia Williams, Student Representative**
V. Historical/Data	**Dr. Sherlynn Hall** **Brandy Jacobsen** **Charlotte Ashley**
VI. Editorial	**Patricia Flanagan**
VII. Administrative/Records	**DeNesia Anderson** **Fatina Elliott**

CHANCELLOR'S EXECUTIVE LEADERSHIP TEAM

DR. VELORIA NANZE
VICE CHANCELLOR FOR FINANCE & ADMINISTRATION

DR. SHERLYNN HALL
VICE CHANCELLOR FOR ACADEMIC AFFAIRS & WORKFORCE DEVELOPMENT

DR. DOMETRIUS HILL
VICE CHANCELLOR FOR STUDENT AFFAIRS & ENROLLMENT MANAGEMENT

DR. JOHN GALIOTOS
DEAN OF WORKFORCE DEVELOPMENT & ASSOCIATE PROFESSOR OF CHEMISTRY

MS. BRANDY JACOBSEN
CHIEF FINANCIAL OFFICER

MS. CHERYL D. TAYLOR
DIRECTOR OF ADVANCEMENT

MS. CAROLYN MILLER
DIRECTOR OF INFORMATION TECHNOLOGY/DEPUTY CIO ENTERPRISE SYSTEMS

SOUTHERN UNIVERSITY SYSTEM BOARD OF SUPERVISORS

MR. TONY CLAYTON, ESQ. CHAIRMAN

MR. REGGIE ABRAHAM
VICE CHAIRMAN

MR. PAUL P. MATTHEWS

MR. MYRON K. LAWSON

MR. RANI G. WHITFIELD, M.D.

MS. MAPLE L. GAINES

ATTY. EDWIN M. SHORTY, JR.

REV. SAMUEL C. TOLBERT, JR.

MS. ZAZELL V. DUDLEY

MS. ANN A. SMITH

ATTY. DOMOINE D. RUTLEDGE

MR. CHRIS MASINGILL

ATTY. QUINCEY CAWTHORNE

SHERIFF HENRY L. WHITEHORN, SR.

REV. DONALD RAY HENRY

MS. DANA BAILEY
STUDENT REPRESENTATIVE

MR. DENNIS J. SHIELDS, ESQ.
PRESIDENT & SECRETARY TO THE BOARD OF SUPERVISORS

GLOSSARY

Academic Momentum: The progress students make toward completing their educational goals by earning credits consistently and meeting key milestones, which increases their likelihood of graduating on time.

Accreditation: The process by which an official accrediting agency (in SUSLA's case Southern Association of Colleges and Schools Commission on Colleges, SACSCOC) evaluates and certifies an institution's academic programs, resources, and operations to ensure they meet established quality standards.

Baseline: A minimum or starting point of data used for comparison or a control.

Community College Survey of Student Engagement (CCSSE): A survey that measures student engagement in educational practices proven to promote learning, persistence, and success at community colleges.

Early Momentum Metrics: Key indicators that measure a student's progress in the first year of college, such as credit accumulation, gateway English and math completion, and program momentum, which are strong predictors of long-term academic success.

Endowment: A financial asset, often in the form of donations or investments, that an institution manages to generate income for long-term sustainability, typically used to support scholarships, faculty positions, and other institutional priorities.

Faculty/Staff Institutional Priorities Inventory: A survey tool that assesses faculty and staff perceptions of an institution's priorities and performance, helping align institutional goals with the needs and expectations of employees.

Flipped Classroom Activities: Learning activities where students engage with instructional content, such as videos or readings, before class and use in-class time for active, hands-on learning, problem-solving, and collaboration.

Full-Time Equivalent (FTE): A measurement used to represent the workload of students or employees in a way that makes it easier to compare part-time and full-time status. For students, it typically refers to the number of credit hours a student is enrolled in, and for employees, it reflects the total hours worked in relation to a full-time schedule.

GLOSSARY

Institutional Employee Pulse Survey: A short, frequent survey designed to gather quick feedback from employees on their satisfaction, engagement, and workplace experiences to inform institutional improvements.

Louisiana Board of Regents Funding Formula for Higher Education: A system used to allocate state funding to public higher education institutions in Louisiana based on factors such as prior year allocation, cost associated with programs, general operations, and student outcomes, with the goal of promoting accountability and improving educational outcomes.

Meauxmentum Approach: A statewide initiative by the Louisiana Board of Regents designed to inspire higher education institutions to prioritize student success through clear pathways, improved support services, and strategies that close equity performance gaps and help students achieve credentials of value.

Noel Levitz's Student Satisfaction Inventory (SSI): A survey tool that measures student satisfaction and priorities, helping institutions identify strengths and areas for improvement to enhance the student experience.

Rubric: A set of criteria or guidelines used to evaluate and assess the quality of a student's work, often including specific descriptions of various levels of performance for each criterion.

Scorecard: A performance management tool used to track, measure, and report on key metrics or objectives aligned with an organization's strategic goals. It provides a clear, concise way to assess progress and outcomes, ensuring accountability and continuous improvement.

Stewardship of Place in Higher Education: A term coined by the Association of State Colleges and Universities (AASCU) to describe the role of regional comprehensive universities to actively engage with and address the needs of their local communities by fostering partnerships, supporting economic development, and improving social and educational outcomes.

Substantive Change: A significant modification or expansion of the nature and scope of an accredited institution that can impact the quality of educational programs and services.

SUSLA

SOUTHERN UNIVERSITY SHREVEPORT LOUISIANA

Excellence · Integrity · Accountability · Service · Diversity

Tony Clayton, Esq.
SU Board Chairman

Dennis Shields
SU System President

Dr. Aubra J. Gantt
Chancellor -SUSLA

SOUTHERN UNIVERSITY AT SHREVEPORT

3050 MARTIN LUTHER KING, JR. DRIVE, SHREVEPORT, LA 71107 • SUSLA.EDU • 318.670.6000

Southern University at Shreveport does not discriminate on the basis of race, color, national origin, gender, age, disability, or any other protected class. For Title IX inquiries, contact Jared Francis, (318) 670-9302 or TitleIX@susla.edu.
Section 504 Coordinator: Dr. Anjelica Hart, NCR Building, Room 125, (318) 670-9367.